BraunAbility®

Chrysler Pacifica Power Foldout Wheelchair Accessible Vehicle

Operator's Manual

506968 Rev B

Congratulations

The BraunAbility® employee family thanks you for purchasing your new wheelchair accessible vehicle. We design and build each BraunAbility® vehicle for reliability, quality and safety. Our founder, Ralph Braun, instilled that ethic from day one, and we live by that commitment today.

This manual includes operating instructions, safety precautions and maintenance procedures for your new vehicle. As long as it's properly maintained and operated, your BraunAbility® vehicle will provide mobility freedom for years.

Thank you again for your business, and enjoy your independence!

Sincerely,

The BraunAbility® Family

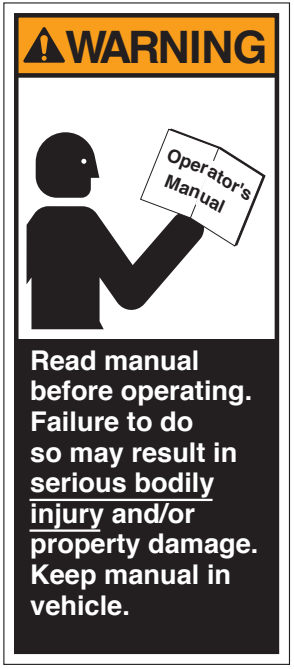

Warranty and Registration Instructions 2
Introduction 3
Operation Quick Reference Guide 4, 5
Features 6, 7
Safety Precautions 8
Operation
- Terminology 9
- Control System 9
- Control Switches 10-14
- Ramp Access Sliding Door 14, 15
- Kneel System 16, 17
- Power Ramp Operation 18
- Power Ramp Safety 19
- Power Ramp Manual Operation 20
- Ramp Electrical Override 21
- Ramp Passenger Safety 22-24

Wheelchair Tiedown and Occupant Restraint 26-43
Seat Removal and Installation
- Front Seats (General Information) 44, 45
- Front Seat Bases 46
- Seat Electrical Harnesses 47-49
- Front Seat Removal 50, 51
- Front Seat Installation 52, 53
- Third Row Seat (General Information) 54
- Third Row Seat Footrest 54

Maintenance 56, 57
Auxiliary Power Supply / Below Floor Obstructions 58-61
Jacking and Tire Changing 62
Towing 63
Reporting Safety Defects 64

WARRANTY AND REGISTRATION

Examine your vehicle for any damage. Should any damage have occurred during delivery, notify the carrier at once with any claims.

Review the service agreement, delivery checklist and warranty registration form with your sales representative. The form must be signed by the consumer and retailer. A hard copy is available upon request.

The warranty registration form must be processed electronically by the sales representative to activate the warranty. See the Warranty Booklet for detailed terms and provisions applicable to this vehicle.

Record the last eight digits of the vehicle identification number (VIN) in the space provided for future reference. This information must be provided when filing a warranty claim or ordering parts.

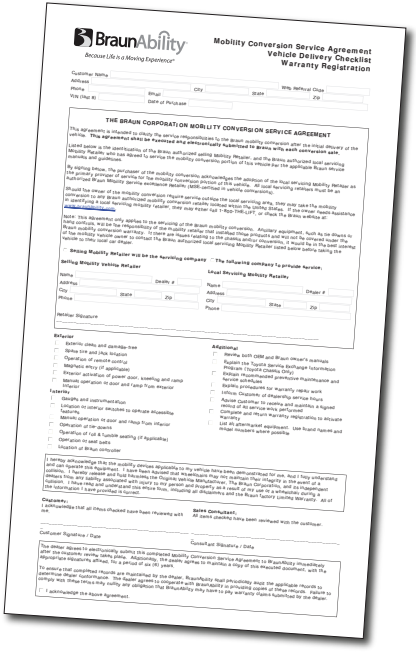

BraunAbility
Because Life is a Moving Experience®

Mobility Conversion Service Agreement
Vehicle Delivery Checklist
Warranty Registration

Customer Name
Address
Home | Cell | Work/Retrieval Chgs
City | State | Zip
Make | Model | Year | Date of Purchase
Vin (Last 8)

THE BRAUN CORPORATION MOBILITY CONVERSION SERVICE AGREEMENT

This agreement is intended to clarify the service responsibilities to the braun mobility conversion after the final delivery of the vehicle. **The agreement should be reviewed and electronically submitted to Braun with each conversion sale.**

Listed below is the participation of the Braun authorized selling Mobility Retailer, and the Braun authorized local servicing Mobility Retailer as well as the participation of the Braun authorized selling Mobility Retailer, and the Braun authorized local servicing Mobility Retailer and guidelines.

By signing below, the purchaser of the mobility conversion acknowledges the selection of the final servicing mobility retailer as the primary provider of service for the mobility conversion provided by Braun. All local servicing retailers must be an Authorized Braun Mobility Service Retailer (MSR certified in vehicle conversions).

Should the owner of the mobility conversion require service outside the local servicing area, they may take the mobility conversion to any Braun authorized mobility conversion retailer (contact Braun Mobility Sales, if the owner needs Registration assistance).

Note: This Agreement only applies to the servicing of the Braun mobility conversion. Ancillary equipment, such as the chassis or lift, may be subject to the authority of the manufacturer of the equipment. If there are issues relating to the ancillary equipment, it would be in the best interest of the mobility vehicle owner to contact the Braun authorized local servicing Mobility Retailer listed below before taking the vehicle to the local car dealer.

☐ **Braun Mobility Retailer will be the servicing company** ☐ **The servicing company to provide service.**

Selling Mobility Vehicle Retailer
Name | Dealer #
Address
City | State | Zip
Phone

Local Servicing Mobility Retailer.
Name | Dealer #
Address
City | State | Zip
Phone

Retailer Signature

Exterior
- ☐ Exterior glass and paintdip-free
- ☐ Strike bite and jitter bugs
- ☐ Operation of remote control
- ☐ Graphics entry (if applicable)
- ☐ Exterior activation of power door, assembly and camp
- ☐ Proper operation in door and ramp from exterior switches

Interior
- ☐ Gauges and instrumentation
- ☐ Location to interior switches to operate wheelchair features
- ☐ Manual operation in door and ramp from interior
- ☐ Operation of lift seats
- ☐ Operation of lift & tumble seating (if applicable)
- ☐ Operation in seat belts
- ☐ Location of Braun computer

Additional
- ☐ Review both OEM and Braun owner's manuals
- ☐ Explain the Toyota Service Exchange Extension Program (Toyota Canada Only)
- ☐ Explain Hypermobility protective hypothesis and safety attitudes
- ☐ Review procedures for warranty repair work
- ☐ Inform Customer of Preventing service hours
- ☐ Advise customer to review and maintain a logbook
- ☐ Review the service area performed
- ☐ Complete and return warranty registration to activate warranty
- ☐ List all aftermarket equipment. Use front figures and model numbers where possible.

I hereby acknowledge that the mobility service agreement to my vehicle has been delivered to me. And I hereby authorize Braun to make changes to my vehicle and have the service performed. I have been informed that warranties may not be eligible in the event of a collision. I hereby release and indemnify Braun and its employees, agents and property as a result of my participation in the Braun Mobility Service Agreement, and the information I have provided is correct.

Customer:
I acknowledge that all items checked have been reviewed with me.

Sales Consultant:
All items checking have been verified with the customer.

Customer Signature / Date

Consultant Signature / Date

The dealer agrees to electronically submit the completed mobility Conversion Service Agreements to Braunability immediately after the completed service takes place. Additionally, the dealer agrees to provide a copy of the completed document, with the appropriate signature, to the customer.

To ensure that completed records are maintained by the dealer, Braunability will periodically audit the applicable records to determine compliance. The dealer agrees to cooperate with braunability in providing copies of these records. Failure to comply will result in the mobility entity and completion that Braunability may bond to any warranty claims submitted by the dealer.

☐ I acknowledge the audit agreement.

Vehicle Identification Number (VIN) _____

BraunAbility® wheelchair accessible vehicles are designed to provide mobility independence for wheelchair passengers. Familiarity with proper operation and maintenance procedures will help ensure safe, trouble-free operation.

We encourage wheelchair passengers and their attendant(s) to review the material contained in this manual with your sales representative, before attempting operation. Any questions or concerns can be addressed at that time.

This manual addresses standard features as well as options. Refer to the instructions applicable for your vehicle. Disregard instructions that do not apply in this manual or the OEM manual. Contact Customer Care at 1-800-488-0359 if any of this information is not understood.

Store this manual in the vehicle along with your OEM owner's manual.

If you experience an operation problem or there is any sign of wear, damage, or other abnormal condition, contact your sales representative or call 1-800-488-0359. One of our Customer Care representatives will direct you to an authorized service center.

Operation Overview

This overview provides a simplified explanation of operation. Read the entire manual for complete details. Contact Customer Care at 1-800-488-0359 if any of this information is not understood.

Power Operation

Power functions are managed by the electronic control system. The control system can be activated using an OEM remote keyless entry transmitter or one of the interior control switches detailed on pages 10-13.

OEM Remote Keyless Entry Transmitter

Press and release this switch two times (×2)

Interior mounted control switches display one of these graphics.

or

One-Touch Control Activation

Power door, kneel and ramp functions are activated by pressing and releasing a control switch (press and release remote entry transmitter button twice).

Open Functions: When activating the Open functions, the power door opens, the kneel system lowers the rear of the vehicle and the ramp deploys.

Close Functions: When activating the Close functions, the ramp stows, the kneel system raises the rear of the vehicle and the power door closes.

Manual Operation

The passenger side power sliding door and power ramp can be manually operated. Read this manual for further details.

Operating Your Wheelchair Accessible Vehicle Couldn't Be Simpler . . .

1 Just press twice on the remote transmitter passenger slide door button or one of the interior mounted control switches . . .

2 And the sliding door opens

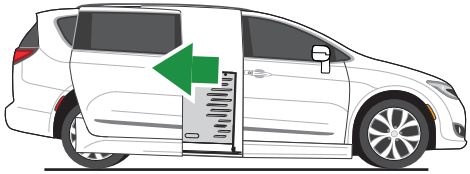

3 The rear suspension lowers

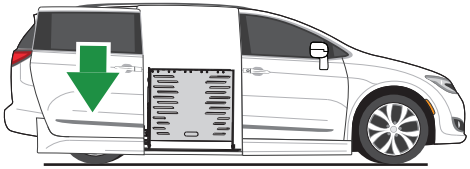

4 The ramp deploys

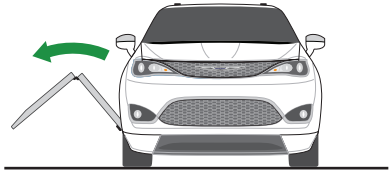

Allowing easy entrance!

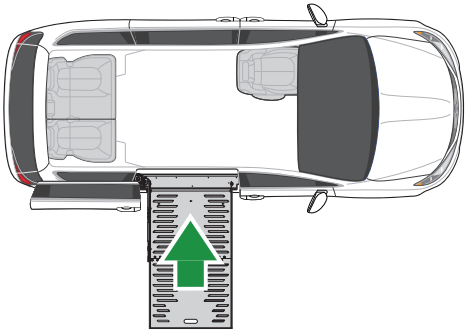

Electronic Control System: The electronic control system provides simple one-touch activation of conversion power functions. For your convenience, the power features can be activated using an OEM remote keyless entry transmitter or one of the interior switches detailed on pages 10-13.

Ramp Access Passenger Side Power Slide Door: The control system activates the passenger side power slide door for ramp access. The slide door and lowered floor configuration provides 52-1/2" clear vertical passageway.

Note: The driver-side sliding door is lowered to provide clear passage also.

Ramp: The fully automatic power ramp provides 30-1/8" usable width. The power ramp can be manually operated (stow electrical override available).

Electrohydraulic Power Kneeling Rear Suspension: "Kneeling" is the lowering motion of the electrohydraulic rear suspension. The kneel feature reduces the slope of the ramp when deployed.

Lowered Floor from Rear Axle to Toe Pan: This feature provides additional headroom, and further reduces the slope of the ramp.

Ground Clearance: The lowered floor results in reduced ground clearance. Be aware of limited ground clearance.

Ground Effects: Exterior color-matched ground effect panels conceal the lowered floor and lowered sliding doors.

Forward-Facing Wheelchair Tiedown and Occupant Restraint System: Floor track (anchorage point) provided in the front passenger seat and midpoint lowered floor areas can be utilized for restraint of wheelchair passenger(s). See Figure 1 for anchorage point locations and wheelchair mounting positions (Positions B and C).

One Forward-Facing Wheelchair Tiedown and Occupant Restraint Belt Kit is supplied for the tie down of one wheelchair and restraint of an occupant. The belt/tiedown kit is used in conjunction with the floor track (anchorage points). Additional restraint systems can be purchased (option).

Note: Wheelchair capacity may have limitations based on the dimensions of specific wheelchairs.

Quick-Release Front Seats: The driver and front passenger seats are equipped with quick-release seat base attachments (making seat removal and installation procedures simple).

Driver Seat: For the wheelchair occupant who chooses to drive, this seat (Position A) can be removed and adaptive driving systems custom tailored for the individual can be purchased from and installed by your local mobility dealer.

Auxiliary Power Supply for Dealer-Installed Power Seat or Electric Tiedowns: This power source is available to accommodate adaptive driving systems custom tailored for the individual (purchased from and installed by your local mobility sales representative). See pages 58-61.

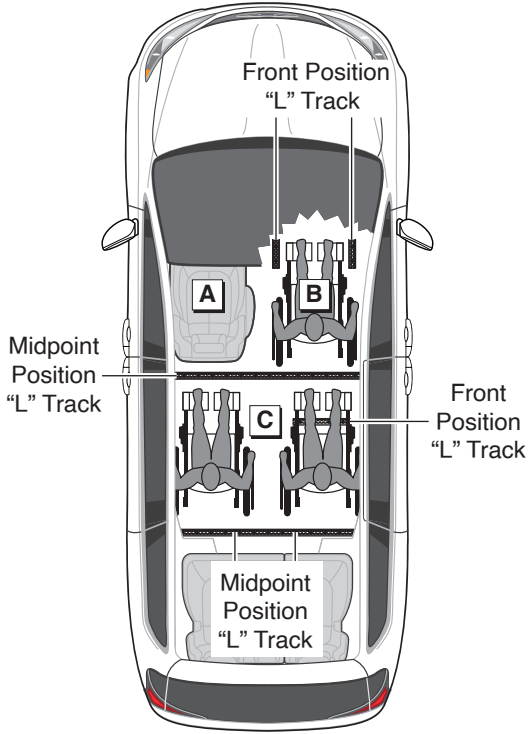

Figure 1

Safety Symbols

SAFETY FIRST! Know That....

A All information contained in this manual and supplements (if included), is provided for your safety. Familiarity with proper operation instructions as well as proper maintenance procedures are necessary to ensure safe, trouble-free operation. Safety precautions are provided to identify potentially hazardous situations and provide instruction on how to avoid them.

B

⚠WARNING

This symbol indicates important safety information regarding a potentially hazardous situation that could result in serious bodily injury and/or property damage.

C

⚠CAUTION

This symbol indicates important information regarding how to avoid a hazardous situation that could result in minor personal injury or property damage.

D **Note:** Additional information provided to help clarify or detail a specific subject.

These symbols will appear throughout this manual and may appear on labels posted in your vehicle.
Recognize the seriousness of this information.

Before Operation

Before utilizing wheelchair accessible features, park the vehicle on a level surface away from vehicular traffic. Place the vehicle transmission in Park and engage the parking brake. Power function control switches can be activated only if the vehicle transmission is in Park or Neutral.

Terminology

“Kneeling” is the lowering motion of the electrohydraulic rear suspension. The term “deploy” (unfold) indicates the lowering motion of the ramp to the deployed position. “Stow” (fold) is the raising motion of the ramp to the vertical (stowed) position.

The terms “Open” and “Close” refer to sequences of power functions that will occur when activated by the electronic control system. When activating the Open functions, the power door opens, the kneel system lowers the rear of the vehicle and the ramp deploys. When activating Close functions, the ramp stows, the kneel system raises the rear of the vehicle and the power door closes.

Control System

Power functions are managed by the electronic control system. The control system can be activated using the remote keyless entry transmitter or any one of the controls addressed on pages 10-13.

BraunAbility® Aftermarket Control Systems Policy

Control systems are designed, tested and manufactured for use with dedicated BraunAbility products. These are the only control systems authorized for use.

Do not attempt to interface aftermarket controls without authorization from BraunAbility. To do so may result in serious bodily injury and/or property damage.

Control Switches

For your convenience, power features can be activated using the OEM remote keyless entry transmitter or one of the interior control switches identified on pages 11-13.

The passenger power sliding door switches provided on the remote keyless entry transmitter and in the overhead console will unlock the passenger side slide door and activate the conversion power door, kneel and ramp functions.

The power sliding door switches provided in the center console and on the wall panels to the front and rear of the passenger side sliding door (B-pillar and C-pillar respectively), are accessible to rear seat passengers including small children. These control switches will activate conversion power functions only if the passenger side power slide door is unlocked and the overhead console Master Lock Out switch is in the ON position. Master Lock Out details are provided on page 13.

BraunAbility wheelchair accessible vehicles are designed with safety and simplicity in mind for ease of operation. If a power function has been activated that was not intended, simply press a control switch to stop or reverse the function. If the desired function has not been activated, press the switch again.

Power function control switches can be activated only if the vehicle transmission is in Park or Neutral.

Control Switches

Switches that activate conversion power functions at all times:

- Keyless Entry Transmitter
- Overhead Console Passenger Power Sliding Door Switch

- All Other Switches

The passenger side power slide door must be unlocked and the Master Lock Out switch must be in the ON position before power functions can be activated.

One-Touch Control Activation

Power door, kneel and ramp functions will be activated by pressing and releasing either control switch shown on this page. Press and release the remote entry transmitter button twice within five seconds.

Remote Keyless Entry Transmitter

Using the OEM remote entry transmitter eliminates the need for an additional remote control.

Press and release switch twice (×2) within five seconds

Overhead Console Switch

A control switch is located on the overhead console.

Press and release switch displaying this graphic

Power Sliding Door Lock and Master Lock Out

The passenger side power sliding door must be unlocked and the overhead console Master Lock Out switch must be in the ON position before the three power sliding door switches identified at right can activate power functions.

One-Touch Control Activation

When the above conditions are met - power door, kneel and ramp functions will be activated by pressing and releasing any of the specified control switches.

Center Console Switch

For front seat passengers, a switch is located in the center console.

Press and release switch displaying this graphic

B-Pillar Switch

A switch is located on the wall panel ahead of the passenger slide door (B-Pillar).

Press and release switch displaying this graphic

C-Pillar Switch

A switch is located on the wall panel behind the passenger slide door (C-Pillar).

Press and release switch displaying this graphic

Power Sliding Door Master Lock Out Switch

The Master Lock Out switch is located in the overhead console. If the Master Lock Out switch is in the OFF position, this OEM feature will disable the three power sliding door switches identified at left. Press the switch to the ON position to enable the control switches.

Press switch displaying this graphic

LED ON/OFF Indicator

Press switch to ON to enable control switches

Press switch to OFF to disable control switches

Kneel On/Off Switch

The Kneel On/Off switch is located on the center console. The Kneel On/Off switch turns the kneel system on and off only. See page 16 for further details.

Press switch to ON position to enable kneel system	**ON**

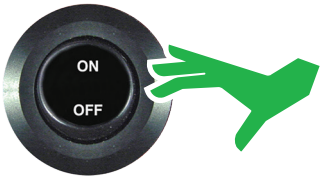

Press switch to OFF position to disable kneel system	**OFF**

Ramp Access Sliding Door

Press and release the remote keyless entry transmitter or one of the interior control switches to activate the power sliding door (control switches detailed on pages 10-13). When a control switch is activated, the door will open and the Open sequence of functions will continue (rear of vehicle kneels and ramp deploys).

Once the Open sequence of functions is complete, press and release a control switch to close the door. The door will close after the ramp stows and the vehicle raises (completing the Close sequence of functions).

Note: If a control switch is activated while the power sliding door is opening or closing, the door will reverse direction.

Note: If the power door is obstructed while opening or closing, the door will reverse direction to the fully closed or fully open position, provided it meets sufficient resistance.

Note: If the inside or outside door handles are used while the power sliding door is activated, the power sliding door feature will be cancelled. Simply press a control switch and the door will open fully. The power door can also be opened or closed manually as detailed at right.

Keep clear of the area in which the power door operates. Ensure door travel path is clear. Personal injury or property damage may occur during power door operation. Be sure the door is fully closed and latched before driving.

Power Door Manual Operation

The passenger side power sliding door can be operated manually. Unlock the passenger sliding door. Open the slide door from inside or outside using the OEM door handles. Always open the door smoothly. Avoid using excessive force when opening and closing the door.

⚠WARNING

Keep clear of area in which power door operates. Failure to do so may result in bodily injury and/or property damage.

Automatic Kneel System

Kneeling is the lowering motion of the electrohydraulic rear suspension. The kneel system lowers the rear of the vehicle. Lowering the rear of the vehicle reduces the slope of the ramp.

When the electronic control system is activated to start the Open functions, the kneel system starts to lower the rear of the vehicle at the same time the power sliding door starts to open. When the Close functions are activated, the rear of the vehicle starts to raise at the same time the ramp begins to stow.

Kneel On/Off Feature

A Kneel On/Off feature is incorporated in the electronic control system. This feature provides the option of kneeling the vehicle when operating the power door and power ramp. The Kneel switch is located on the center console. The Kneel On/Off switch turns the kneel system on and off only. The Kneel switch must be in the On position in order for the kneeling system to be activated.

Note: If the vehicle is in the kneeled position and the Close functions are activated, the vehicle will raise whether the Kneel On/Off switch is On or Off.

Note: If the Kneel On/Off switch is switched from Off to On during the Open sequence of functions or within 60 seconds of ramp deployment, the vehicle will kneel after the ramp is fully deployed.

Kneel On/Off Switch

Press this switch to ON to activate kneel feature.

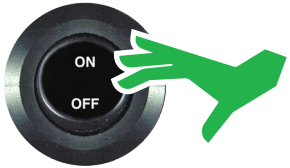

Press this switch to OFF to disable kneel feature.

Note: If the vehicle is in the kneeled position (with ramp deployed) and the transmission is disengaged from Park “P,” the ramp will stow and the vehicle will raise.

Note: Do not leave your conversion in the kneeled (lowered) position for extended periods of time.

In the event the kneel system is not functioning properly, have the kneel system repaired immediately. Do not drive with the rear of the vehicle in the lowered position. Attempting to do so will result in an extremely rough and unstable ride.

Contact your sales representative or call 1-800-488-0359. One of our Customer Care representatives will direct you to an authorized service center.

Kneel Electrical Override

An electrical override feature is incorporated in the kneel system. The override by-passes the electronic control system to electrically power the kneel actuator. The override is available to raise the rear of the vehicle only.

The Kneel Override Switch is located under the passenger side third row seat. Press and hold the switch to release the kneel system (raise vehicle). Release the switch when the rear of the vehicle has raised fully. The kneel actuator motor will ratchet (make clicking sound).

The kneel override switch is located under passenger side third row seat.

Kneel Override Switch

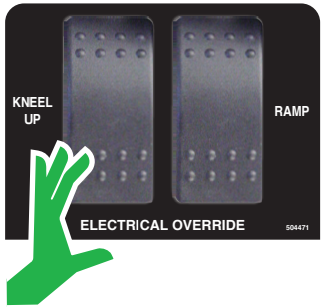

Press and hold this switch to release kneel (raise vehicle).

Power Ramp Operation

The power ramp is activated by the electronic control system using any of the control switches identified on pages 10-13. When a control switch is activated to start the Open functions, the ramp deploys after the power sliding door reaches the fully open position. When the Close functions are activated, the ramp stow function begins immediately (simultaneously with the kneel system).

If a control switch is activated while the ramp is in motion (deploying or stowing), the ramp motor will stop running. Activating a control switch again will start the Close functions (ramp will stow, vehicle will raise and the door will close).

Note: The power sliding door must travel from the full closed position to the full open position in order for the ramp to deploy.

Note: If the vehicle transmission is disengaged from Park “P” while the ramp is deploying (in motion) or when the ramp is in the fully deployed position, the ramp will stow immediately.

Note: If the power ramp is obstructed while deploying or stowing, the ramp motor will stop running, provided it meets sufficient resistance. Press a control switch again and the ramp will stow and the door will close.

Note: When deploying the ramp, the ramp motor stops running when the ramp reaches the nearly horizontal position (approximately 6"- 8" above ground level). The ramp continues to slowly lower the remaining distance by the force of gravity.

Forcing the Ramp: Allow the power ramp to deploy (unfold and lower) fully before boarding the ramp. Forcing the ramp out or down during the deploy/stow functions, or boarding onto the ramp before it is fully-deployed may result in damage to the ramp, motor assembly and/or electronic controller.

⚠CAUTION

Allow ramp to deploy fully before boarding. Failure to do so may result in damage.

Power Ramp Safety

Be certain there is adequate clearance outside the vehicle before deploying the power ramp. Keep clear of area in which the ramp operates. Be certain no person or obstruction is within the path of the ramp when deploying or stowing the ramp. Keep clear of all power ramp moving parts. Do not attempt to grip or hold the ramp or ramp folding mechanism during operation.

WARNING

Provide adequate clearance outside of vehicle to accommodate ramp. Failure to do so may result in serious bodily injury and/or property damage.

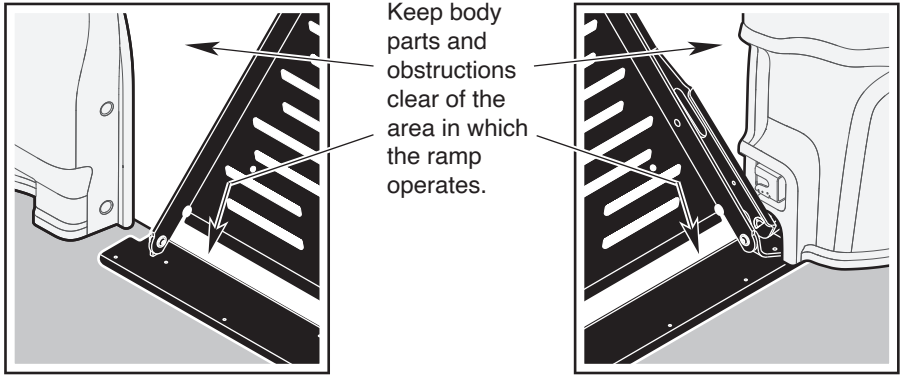

Power Ramp Manual Operation

The power ramp can be manually deployed and stowed. Ramp manual operation procedures must be performed by an assistant.

An oval-shaped hand hold slot is provided on the ramp. Carefully deploy and stow the ramp using the hand hold.

The safety precautions addressed in the Power Ramp Safety section apply to manual ramp operation also. Read and become familiar with all ramp safety precautions.

Keep clear of the area in which the hinged ramp bi-fold extension folds and unfolds. Remember to use good body mechanics when manually stowing and deploying the ramp.

Do not release the ramp when manually deploying or stowing the ramp. The ramp will free-fall. Push the ramp out from inside the vehicle only if an assistant is not available and it is absolutely necessary (power failure). The ramp will free-fall.

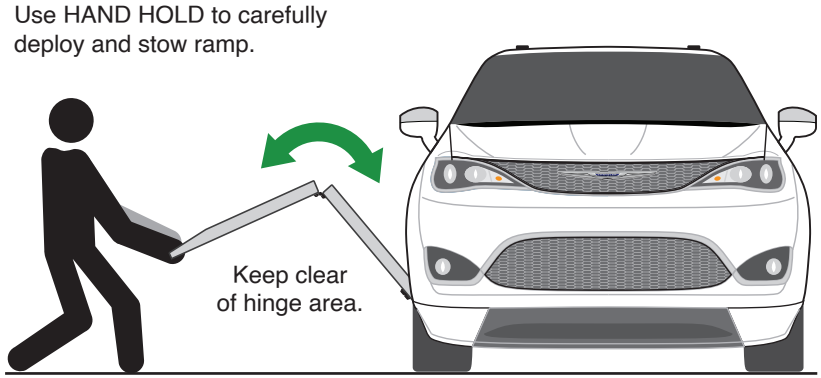

Ramp Electrical Override

An electrical override feature is incorporated in the power ramp system. The over-ride by-passes the electronic control system to electrically power the ramp. The override is available to stow (fold) the ramp only.

The ramp override switch is located under the passenger side third row seat. Press and hold the switch to stow (fold) the ramp. Release the switch when the ramp is fully stowed (stops).

Caution: If you stop pressing the override switch before the ramp is fully stowed, the ramp may free-fall.

The ramp override switch is located under passenger side third row seat.

Ramp Override Switch

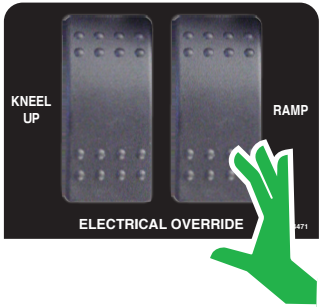

Press and hold this switch to stow the ramp.

Ramp Passenger Safety

Wheelchair passengers and attendants (when applicable), must use basic common sense and good judgment regarding ramp safety. Each wheelchair passenger has a unique set of physical abilities, combined with the physical characteristics of his or her wheelchair that dictate the method in which he or she will enter and exit the conversion. Consequently, the procedures for safe operation outlined in this manual are general in nature. Wheelchair attendants should be instructed on any special needs and/or procedures required for safe transport of wheelchair passengers.

Follow all safety instructions regarding torso restraints, stability, balance, weight distribution and use of attendants as specified in the owner's manual supplied with your wheelchair. Determine, establish and practice ramp boarding and exiting procedures under the direction of your health care professional, your wheelchair representative, and your mobility representative to ensure your ability to do so safely.

Never board the ramp if you or your attendant are intoxicated. The wheelchair should be positioned in the center of the ramp at all times. You must be able to clearly view the ramp whenever boarding and exiting the vehicle. The wheelchair passenger and/or attendant must ensure the ramp is fully deployed before exiting the vehicle.

It is the responsibility of the wheelchair operator to enter and exit the vehicle on the ramp in the safest manner.

Wheelchair-Equipped Occupant Seat Belts: Wheelchair passengers should position and buckle their wheelchair-equipped seat belt (torso restraint),

⚠WARNING

Position and fasten the wheelchair-equipped occupant seat belt before loading onto the wheelchair ramp. Failure to do so may result in serious bodily injury and/or property damage.

as specified by the manufacturer, before loading onto a wheelchair ramp.

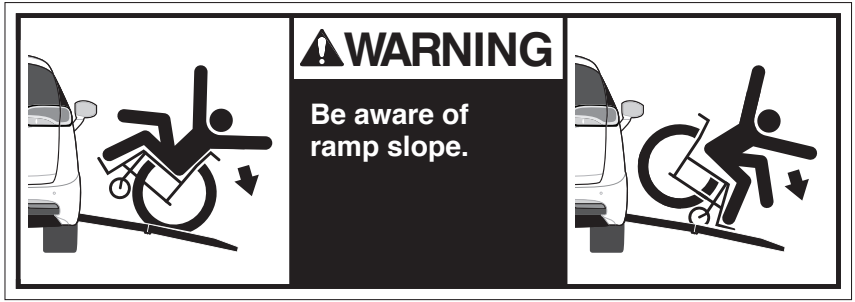

Different types of disabilities require different types of wheelchairs and different types of wheelchair-equipped occupant restraint belt systems (torso restraint). It is the responsibility of the wheelchair passenger to have his or her wheelchair equipped with an occupant restraint (seat belt) under the direction of their health care professional.

Stabilizing Wheelchairs: Powered and manual wheelchairs are designed to remain upright and stable during normal operation. All activities which involve movement in a wheelchair have an effect on the combined center of gravity of the occupant and wheelchair. Be aware of the ramp slope (angle). The slope of the ramp has a direct effect on the center of gravity. Keep in mind your center of gravity and your ability to maintain stability and balance.

Do not operate your wheelchair on the ramp without assistance if you are unable to maintain stability and balance. Counterbalance devices (anti-tippers) may be available from your wheelchair representative to enhance stability and balance.

Do not tilt your wheelchair without assistance. Operate the wheelchair at a slow and constant speed when on the ramp. Do not accelerate suddenly when on the ramp. Do not raise the front wheelchair wheels (pull wheelie) when on the ramp.

The aid of an attendant stabilizing the wheelchair is recommended for optimum safety. Wheelchair passengers who intend to enter and exit the vehicle without the assistance of an attendant must determine the safest and most practical method and orientation of entering and exiting based on the physical characteristics of their personal wheelchair and his or her physical capabilities to maintain stability while the wheelchair is in motion on the ramp.

Wheelchair Attendants: When assisting a wheelchair occupant, remember to use good body mechanics. When the wheelchair is on the ramp, the attendant must grasp the push handles (or other) securely. Detachable wheelchair parts such as arm or leg rests must never be used for hand holds or lifting supports. Doing so could result in the detachable parts being inadvertently detached from the wheelchair resulting in possible injury to the wheelchair occupant and/or the attendant.

Wheelchair Orientation and Securement During Transport: The wheelchair and occupant must face the front of the vehicle and must be secured using the Forward-Facing Wheelchair Tiedown and Occupant Restraint System when riding in the vehicle. See pages 26-43 for details.

INTENTIONAL BLANK PAGE

Terminology

While many of the terms are self explanatory, several have been specifically developed to clarify terminology which is unique to the situation of occupant protection systems that provide both wheelchair tiedown and occupant restraint.

The term “restraint” is used only in reference to the occupant and not in reference to the wheelchair which is “tied down”. Also, while both wheelchair tiedowns and occupant restraints may include webbing material, the term “belt” is used only in context to occupant restraint. The term “strap” is used for webbing material used in a wheelchair tiedown.

Forward-Facing Wheelchair Tiedown and Occupant Restraint System:

Floor track (anchor points) provided in the front passenger seat and midpoint lowered floor areas can be utilized for wheelchair securement and restraint of wheelchair passenger(s).

The passenger seat can be removed and the seat location can be occupied by a wheelchair passenger.

See Figure 2 for “L” track locations (anchorage points) and wheelchair positions (Positions B and C).

Note: Wheelchair passengers shown at right depict the available seating positions. Wheelchair capacity may have limitations based on the dimensions of specific wheelchairs

One Forward-Facing Wheelchair Tiedown and Occupant Restraint Belt Kit is supplied for the tie down of one wheelchair and restraint of an occupant. The belt/tiedown kit is used in conjunction with the floor track (anchorage points). Additional restraint systems can be purchased (option).

Refer to the following guidelines, illustrations, photos and instructions for proper use of the tiedown and restraint system.

The conversion offers the following options for placement and securement of wheelchair passengers.

Driver Seat: This seat (Position A) can be removed and adaptive driving systems custom tailored for the driving wheelchair occupant can be purchased from and installed by your local sales representative.

Front Passenger Seat with Floor Track: The passenger seat (Position B) can be removed and the seat location can be utilized by a wheelchair occupant.

Midpoint Lowered Floor Area with Floor Track: The Midpoint lowered floor area (Position C) can be utilized by wheelchair occupants (capacity limitations apply).

Refer to the following guidelines, illustrations, photos and instructions for proper use of the belt and track restraint system.

⚠WARNING

Position children or small statured adults using wheelchairs in second row positions. Airbag deployment may result in serious bodily injury.

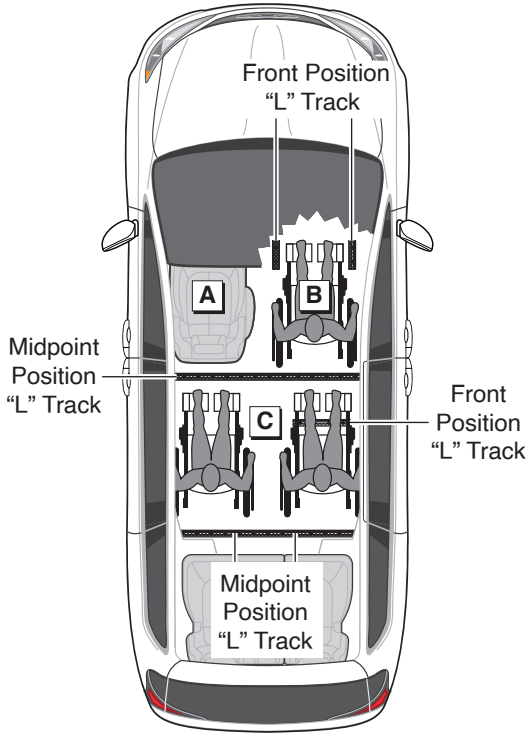

Figure 2

Wheelchair Tiedown

Four adjustable over-center buckle straps are provided for securement of the wheelchair (two for the front and two for the rear).

The straps are equipped with one keeper fitting (attachment) which installs in the vehicle-mounted "L" track anchorage point (details on pages 32 and 33). A hook (securement point) is positioned on the opposite end of the straps for attachment to a solid frame member of the wheelchair. Do not attach straps to detachable wheelchair components such as armrests or leg rests. Front and rear strap tension is required.

Refer to instructions on pages 32-43 for operation procedures.

Occupant Restraint

Lap and shoulder belts should bear upon the bony structure of the body and should be worn low across the front of the pelvis with the junction between the lap and shoulder belts located near the passenger's hip. Wheelchair occupant restraints should not be held away from the body by wheelchair components such as armrests, panels, wheels or frame. Follow all safety precautions and instructions supplied by the belt manufacturer.

Lap and Shoulder Belt Options: An OEM upper torso lap and shoulder belt harness is typically used in conjunction with the stand alone lap belt extension for restraint of a wheelchair passenger. Wheelchair components may restrict or prohibit use of the OEM lap and shoulder belt in some cases. A multi-piece chest and waist belt assembly is supplied as an option for wheelchair passenger restraint when use of the OEM lap and shoulder belt is restricted.

Occupant Restraint

OEM Lap and Shoulder Belt

One adjustable lap belt extension is supplied for use with the OEM lap and shoulder belt (shown at right). The extension belt is equipped with a keeper fitting (anchor point) which installs in the vehicle-mounted "L" track. A female receptacle is positioned on the opposite end of the extension for attachment to an OEM factory-installed upper torso lap and shoulder belt.

The adjustable lap belt extension is supplied with all conversions. A rigid cable style lap belt extension is available as an option (non adjustable). Attachment procedures are identical for both types of lap belt extensions. See the instructions on pages 36-39.

Operate the OEM lap and shoulder belt as instructed in your OEM owner's manual. Connect the OEM lap and shoulder belt to the lap belt extension. Position the upper torso (shoulder) belt across the center of the shoulder. Position the lap belt low across the front of the pelvis (near hip). See the instructions on pages 36-39.

Follow all restraint safety precautions and instructions provided in the OEM owners manual and supplied by the belt manufacturer.

Adjustable Lap Belt Extension (supplied)

Rigid Lap Belt Extension (optional)

Note: An adjustable lap belt extension is supplied. A rigid lap belt extension is available as an option.

Occupant Restraint

Multi-Piece Chest & Waist Belt

The multi-piece chest and waist belt assembly provides separate lap and shoulder belts that can be routed and positioned independently.

Lap Belt (2 Piece): One of the two lap belts is equipped with a female receptacle. The mating lap belt is equipped with the buckle. The opposite end of each lap belt is equipped with a slotted female fitting that attaches to the corresponding wheelchair rear tiedown strap (at floor-mount keeper anchor point). See photos at right and instructions on pages 40-43.

Wheelchair tiedown straps provide a short belt assembly equipped with a lap belt attachment (pin fitting connector). See photo on page 28. Connect the lap belt slotted fitting to the mating pin fitting (engage pin in slot). Adjust lap belts as needed using belt adjuster.

Shoulder Belt: The adjustable shoulder belt is equipped with a slotted female fitting that attaches to the lap belt (equipped with a pin fitting). The opposite (upper) end of the belt is equipped with a pin fitting that attaches to the vehicle-mounted shoulder belt adaptor (adaptors located at OEM shoulder belt positions). Shoulder belt adaptors are equipped with a slotted female fitting that attaches to the shoulder belt buckle pin fitting.

2-Piece Waist (Lap) Belt (female) (male)

Chest (Shoulder) Belt

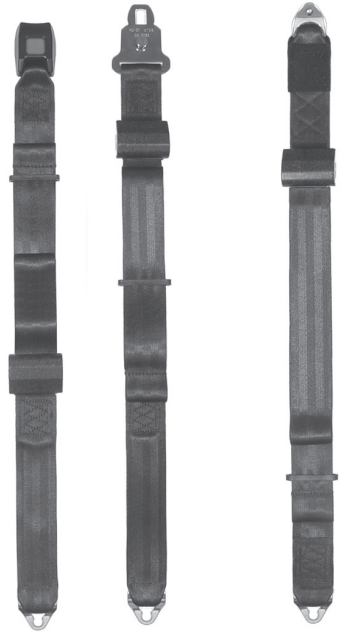

Connect the adjustable shoulder belt upper pin fitting to the wall-mounted shoulder belt adaptor female fitting (engage pin in slot). Connect the shoulder belt lower slotted female fitting to the male lap belt pin fitting (engage pin in slot). Adjust shoulder belt as needed using belt adjuster. See photos at left and instructions on pages 40-43.

Strap, Belt and Track Maintenance

Inspect strap and belt assemblies frequently. Any damage such as strap/belt cuts, fraying or malfunctioning call for replacement of the entire strap/belt assembly. "L" track must be clean and not worn, bent or otherwise damaged (prohibiting proper strap/belt attachment). If there is any sign of damage, wear, abnormal condition or improper operation of straps, belts, strap/belt hardware (hooks, keepers, latch plate, receptacle), or track, discontinue use and replace components immediately.

Follow all inspection and maintenance instructions supplied by the belt manufacturer. Severe conditions (weather, environment, heavy usage, etc.) may require more frequent inspections. Exposure to severe conditions will dramatically reduce the life of the system.

⚠WARNING

No product developed to date can guarantee successful securement of the wheelchair, even at low speeds, in the event of an accident. The Wheelchair Tiedown and Occupant Restraint System does meet the most widely referenced Federal Motor Vehicle Safety Standards used for contemporary restraint equipment. However, this equipment does not ensure stability of the wheelchair in the event of an accident at any speed.

Keep straps/belts clear of sharp objects. Do not alter straps/belts.

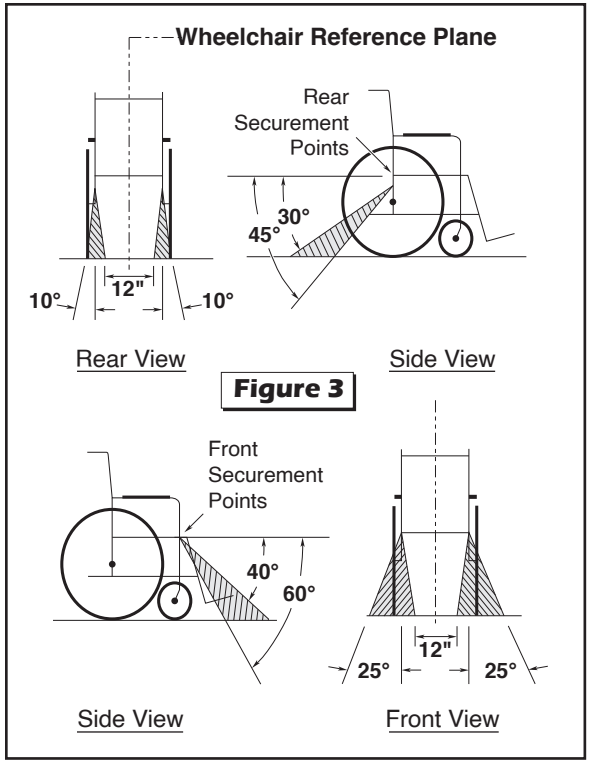

Figure 3

Tiedown Strap Angles

Locate wheelchair in forward-facing position centering wheelchair squarely within “L” track. The front and rear straps, when attached, should create angles approximately as shown in Figure 3. Preferred angles and locations of straps from wheelchair securement points to vehicle anchor points are shown. Note: These are optimum angles and cannot be achieved in some cases.

Keeper Fitting and “L” Track Attachment Instructions

The straps supplied in the Forward-Facing Wheelchair Tiedown and Occupant Restraint System are equipped with keeper fittings (attachments) which engage the “L” track (anchorage points). Engage and release the keeper fittings as detailed and shown on the following page. Note: Refer to pages 34-43 for strap attachment and release procedures.

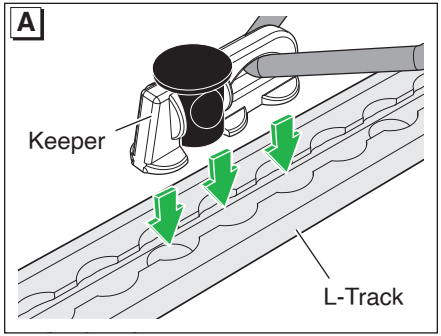

Align engagement feet with holes.

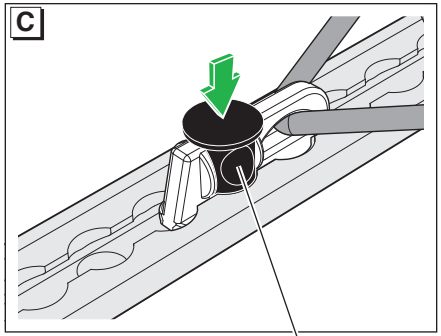

Fully-engaged Plunger

Keeper Fitting and "L" Track Attachment Instructions

To Engage Keeper Fitting:

1. Insert keeper fitting into track (align engagement feet with holes in L-Track). See Figure A.

2. Push down on fitting and slide fitting in either direction until it clicks and locks in position (see Figures B and C). Pull firmly on strap to ensure fitting is locked in track.

To Release Keeper Fitting:

Lift plunger and slide fitting in either direction and lift fitting out of track. See Figure D.

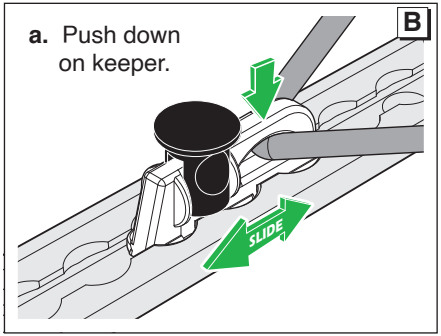

b. Slide keeper in either direction.

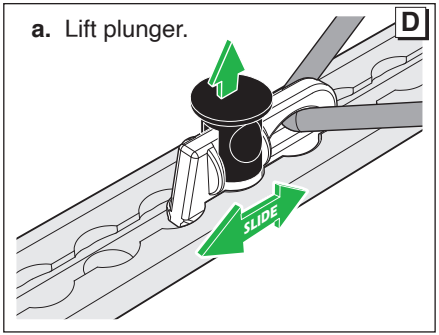

b. Slide keeper and lift.

Over-Center Strap Attachments

1. Place wheelchair facing forward in securement area. Apply wheel brakes or turn power off.

2. Attach the four tiedown hooks to solid frame members or weldments, near seat level (securement points). Ensure tiedowns are fixed at approximately 45 degrees, and are within angles shown in Figure 3 on page 32. Do not attach hooks to wheels, plastic or removable parts of wheelchair.

3. Position and connect strap keeper fitting (attachment) to appropriate track anchorage point (slots). Attach keeper as detailed on page 33. Pull firmly on strap to ensure fitting is locked in track.

Wheelchair Tiedown **Figure 4**

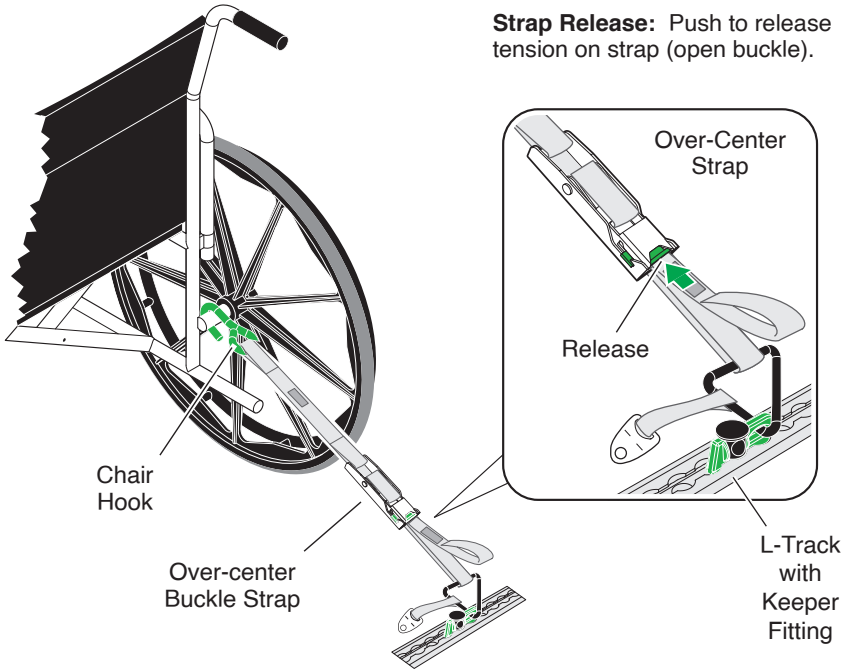

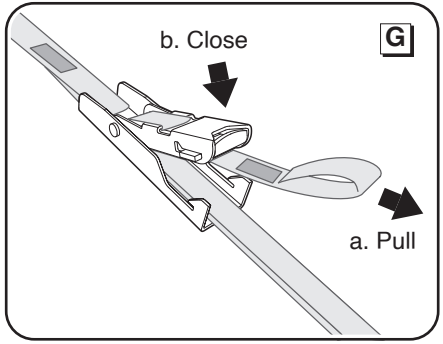

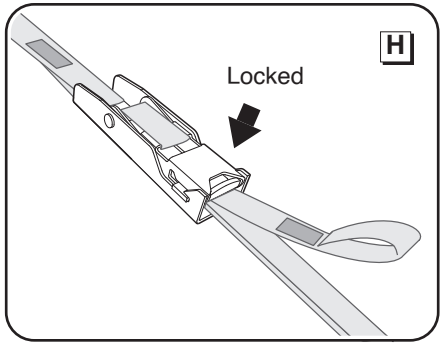

Wheelchair Tiedown

4. With buckle open, pull loose end of strap until tight (see Figure G). While holding the loose end with one hand, close the buckle until it locks. See Figures G and H.

5. Connect Velcro™ strips to keep excess strap off floor. See Figures I and J.

Repeat procedures for all tiedown straps.

Note: Check to see that front and rear straps are tight and the chair does not have any movement.

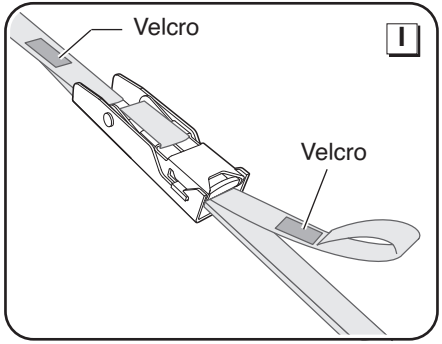

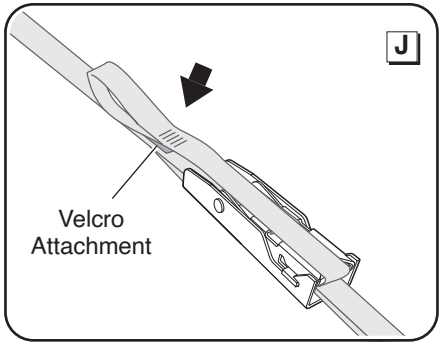

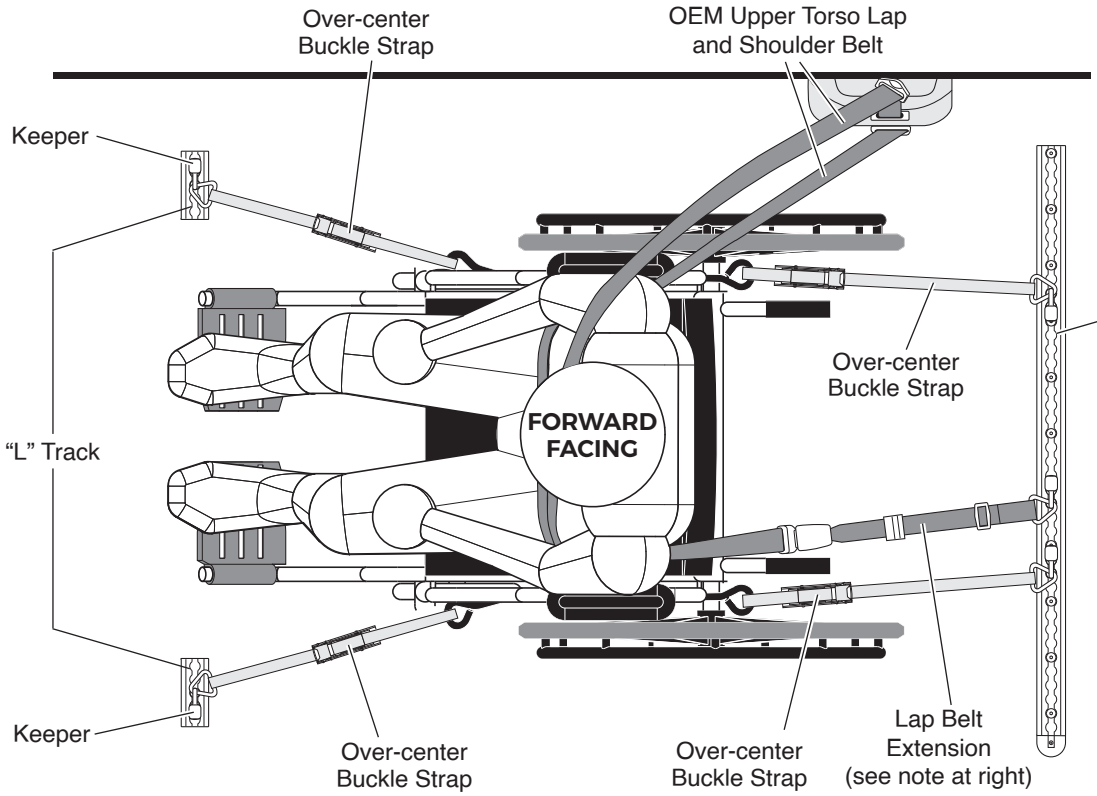

Figure 5

OEM Lap and Shoulder Belt

Lap Belt Extensions: An adjustable lap belt extension is supplied (shown in Figures 5, 6 and 7). A rigid lap belt extension is available as an option (see page 29). Multi-piece chest and waist belts shown in Figures 8, 9 and 10 on pages 40-42.

Note: Generic seat position shown. Attachment procedures are identical for all positions.

Figure 6

OEM Lap and Shoulder Belt

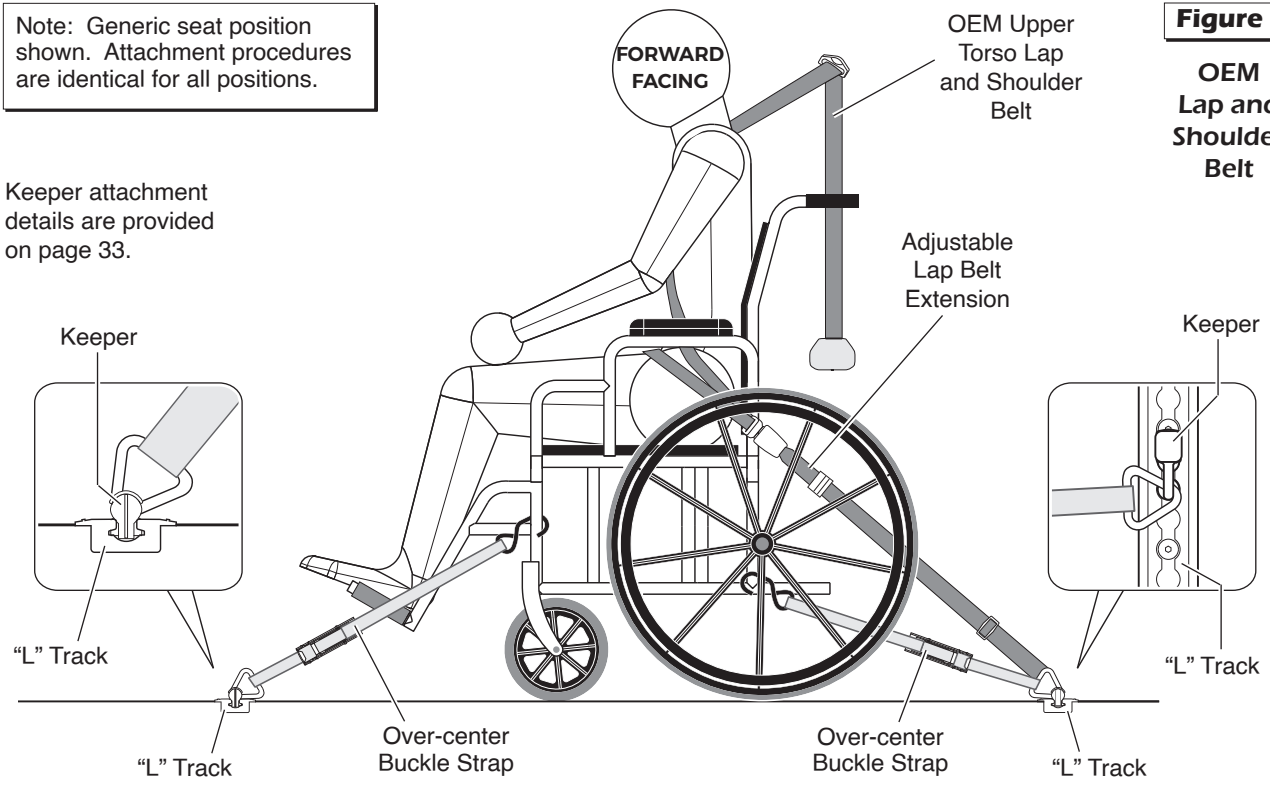

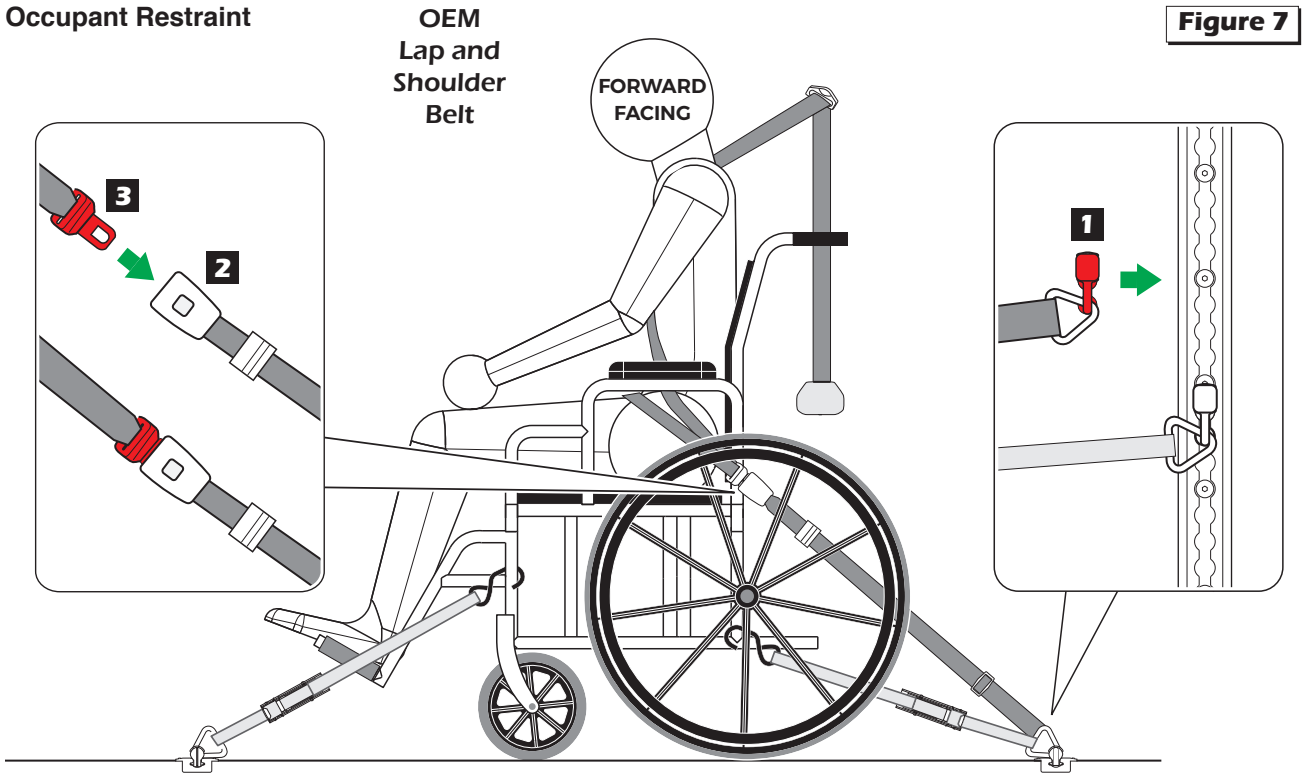
Occupant Restraint
OEM
Lap and
Shoulder
Belt
FORWARD
FACING
3
2
1

Figure 7

Occupant Restraint

OEM Lap and Shoulder Belt: OEM lap and shoulder belts are addressed on pages 36-39. Refer to pages 40-43 for multi-piece chest and waist belts.

Lap and Shoulder Belt Attachments

1. **Attach Lap Belt Extension** - On the aisle side, attach lap belt extension with female buckle to L-track with keeper fitting **1**. Feed lap belt extension with integrated stiffeners through openings between seat backs and bottoms, and/or armrests to ensure proper belt fit around occupant.

2. **Attach OEM Upper Torso Lap and Shoulder Belt**

   Extend shoulder belt over passenger's shoulder and lap belt across torso. Attach combination lap / shoulder belt with male tongue **3** into female buckle **2**.

   Note: OEM lap / shoulder belts serve as both window-side lap belt and shoulder belt.

3. **Occupant Restraint** - Ensure belts are adjusted as firmly as possible, but consistent with user comfort.

   Lap and shoulder belts should bear upon the bony structure of the body and should be worn low across the front of the pelvis with the junction between the lap and shoulder belts located near the passenger's hip. Wheelchair occupant restraints should not be held away from the body by wheelchair components such as armrests, panels, wheels or frame. Follow all safety precautions and instructions supplied by the belt manufacturer.

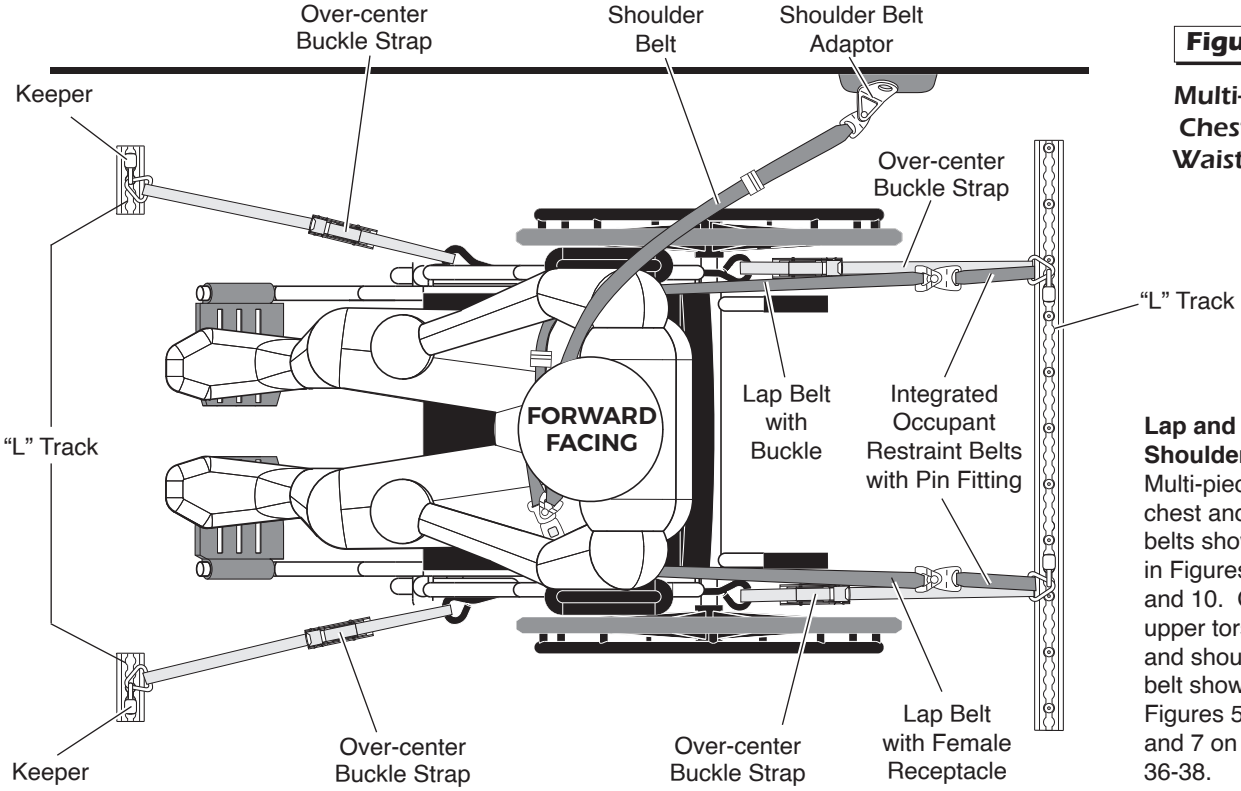

Figure 8

Multi-Piece Chest and Waist Belts

Lap and Shoulder Belt: Multi-piece chest and waist belts shown in Figures 8, 9 and 10. OEM upper torso lap and shoulder belt shown in Figures 5, 6 and 7 on pages 36-38.

Note: Generic seat position shown. Attachment procedures are identical for all positions.

Figure 9

Multi-Piece Chest and Waist Belts

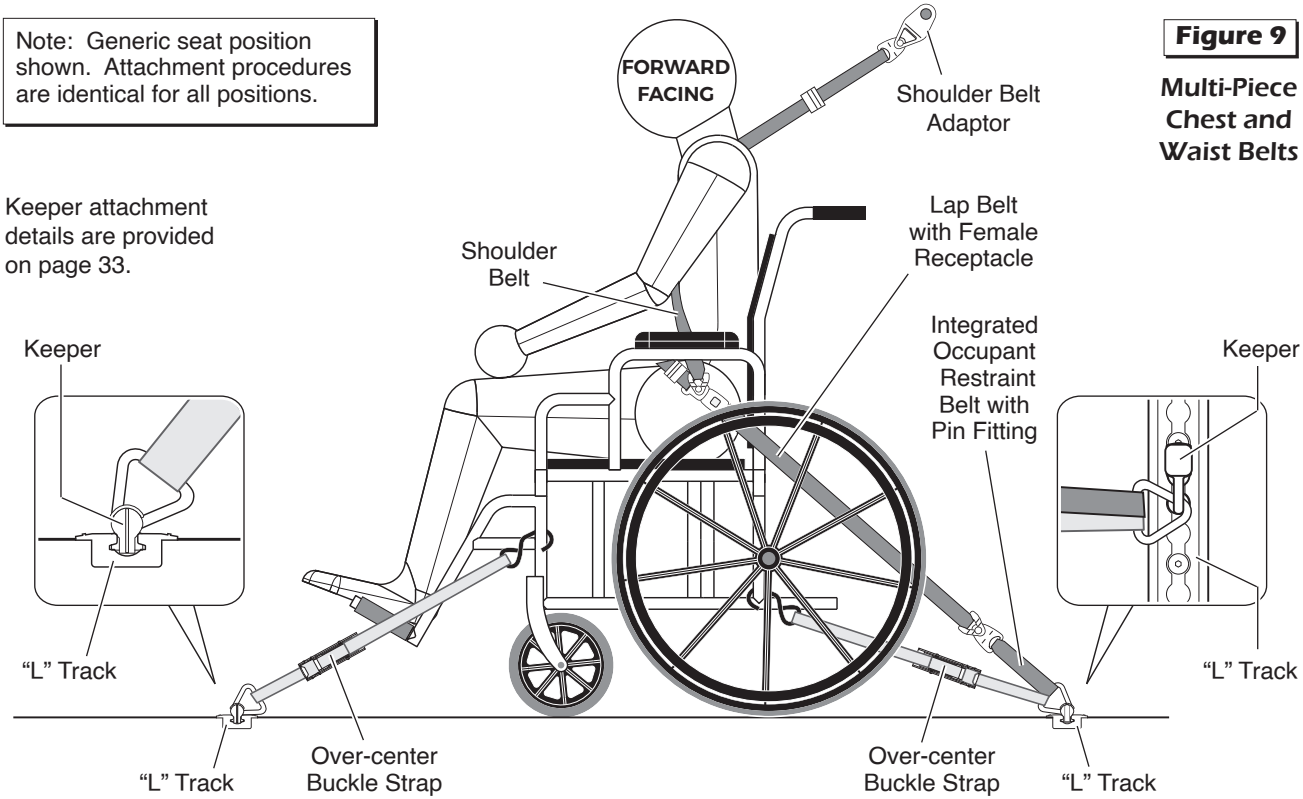

Keeper attachment details are provided on page 33.

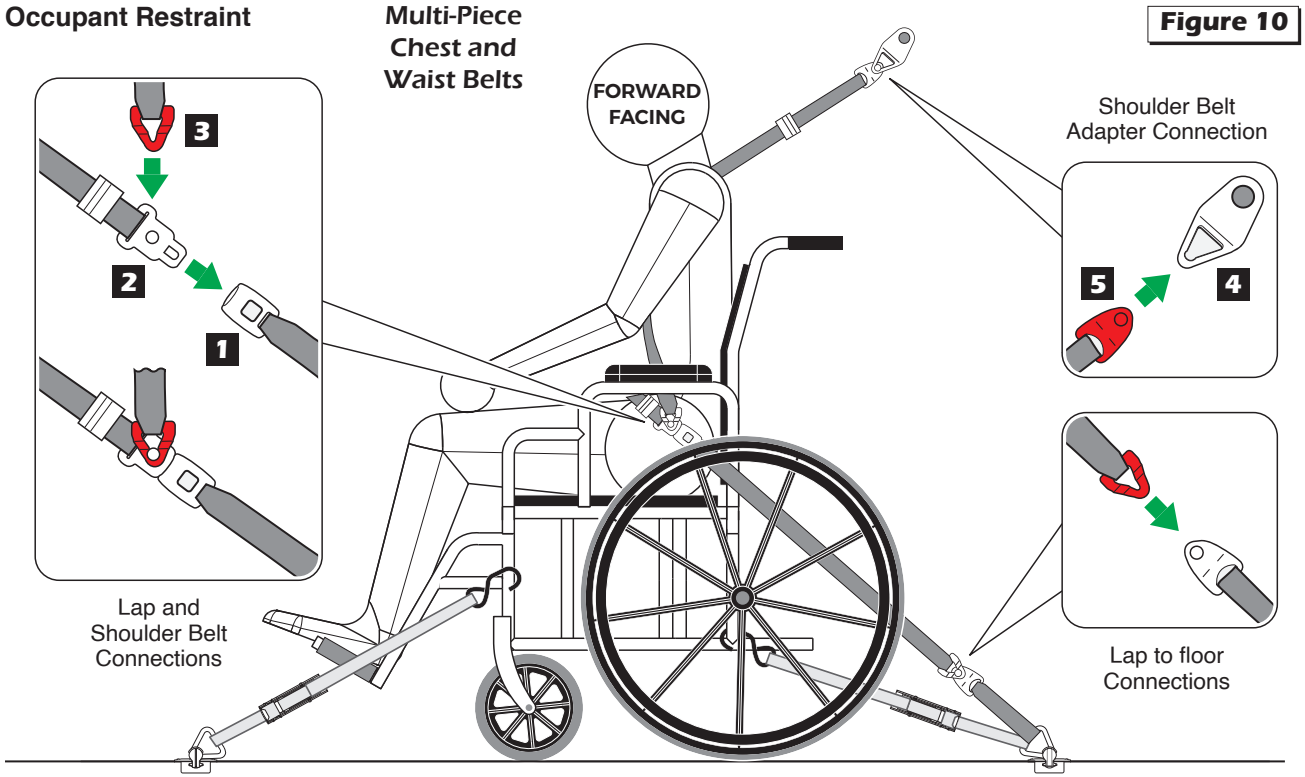
Occupant Restraint
Multi-Piece Chest and Waist Belts
Figure 10
FORWARD FACING
3
2
1
Shoulder Belt Adapter Connection
5
4
Lap and Shoulder Belt Connections
Lap to floor Connections

Occupant Restraint

Multi-piece Chest and Waist Belts: Multi-piece belts are addressed on pages 40-43. Refer to pages 36-39 for OEM upper torso lap and shoulder belt details.

Lap & Shoulder Belt Attachments

1. **Attach Lap Belts** - Use integrated stiffeners to feed belts through openings between seat backs and bottoms, and/or armrests to ensure proper belt fit around occupant.

   a. On the aisle side, attach belt with female buckle **1** to rear tiedown pin connector; ensuring buckle rests on passenger's hip.

   b. On the window-side, attach belt with male tongue **2** to rear tiedown pin connector and insert into female buckle **1** .

2. **Attach Shoulder Belt**

   a. On the window-side, attach shoulder belt pin connector **5** to wall mounted shoulder belt adapter **4** .

   b. Extend shoulder belt over passenger's shoulder and across torso, and fasten pin connector **3** onto lap belt **2** .

3. **Occupant Restraint** - Ensure belts are adjusted as firmly as possible, but consistent with user comfort.

   Lap and shoulder belts should bear upon the bony structure of the body and should be worn low across the front of the pelvis with the junction between the lap and shoulder belts located near the passenger's hip. Wheelchair occupant restraints should not be held away from the body by wheelchair components such as armrests, panels, wheels or frame. Follow all safety precautions and instructions supplied by the belt manufacturer.

Front Seats: In an effort to produce vehicles that can be configured to meet a variety of customer needs, the driver and passenger seat bases have been designed so they may be removed. This feature allows the owner and sales representative to determine the appropriate seating arrangement to accommodate owner needs.

⚠WARNING

Park vehicle and turn engine off before removing or installing seats. Failure to do so may result in serious bodily injury and/or property damage.

Driver and passenger side front seats are equipped with quick-release seat base attachments that engage recessed floor strikers. Remove and install seats as detailed on pages 50-53. Note: Driver and passenger side front seats are not interchangeable.

Power Seats: Front seats are equipped with electrical wiring harnesses to accommodate air bags and optional equipment such as climate controlled seats, heated steering wheel, etc. Before removing seats, be certain all seat electrical harnesses are disconnected.

When seats are removed, the seat electrical harness plug must be connected to the receptacle provided in the seat base. Seat wiring harness details are provided on pages 47-49.

When positioning seats, it is your responsibility to reconnect all seat electrical harnesses.

Air Bag Light: Failure to properly connect power seat electrical harnesses may result in power seat functions being disabled and/or the air bag light illuminating.

⚠CAUTION

Disconnect seat wiring harness before removing seat. Failure to do so may result in property damage.

⚠WARNING

Connect front seat wiring harness plug to socket provided in the seat base before removing front seat. Failure to do so may result in serious bodily injury and/or property damage.

Floor Mats: The floor mats supplied with this vehicle were specifically designed for use on the OEM (non-modified) vehicle floor in conjunction with OEM seats. The floor mats are not compatible for use with front seat bases modified for lowered floor application (with riser).

Do not use a floor mat at the front driver seat position when the conversion seat is installed. Improperly fitted and/or secured floor mats can potentially interfere with the operation of the accelerator or brake pedals, resulting in an accident.

Contact your sales representative or call Customer Care at 1-800-488-0359 if any of this information is not understood.

⚠WARNING

Use of a floor mat with the front driver conversion seat base may result in serious bodily injury and/or property damage.

Front Seat Bases

Quick-release seat base (riser) attachments engage recessed floor strikers. A hand-activated T-handle pull release is located at the bottom of the seat on the seat base. Pulling the release handle disengages the floor attachments and deploys the retractable rear wheels. Pushing down on rear of the seat assembly retracts the rear wheels and engages the floor strikers.

Note: The passenger side and drivers side release handles operate the same. Both disengage by pulling the release handle toward the rear of the vehicle. Passenger seat shown.

Figure 11

Passenger Side Front Seat and Seat Base (Riser)

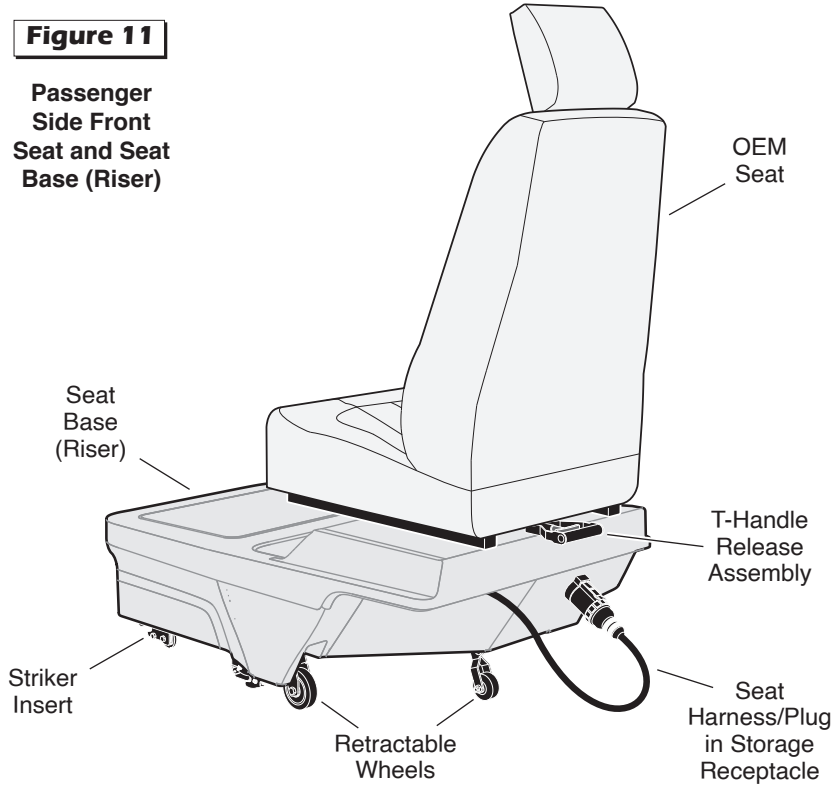

Snap-in Seat Connectors

Front seat wiring harnesses are equipped with a push button release snap-in connector (plug). Operate connectors as detailed here. See pages 48 and 49 for the location of the harness plug, B-Pillar receptacle and storage receptacle.

To Disconnect: Press down seat harness connector release button to disengage connectors.

To Connect: Align the seat harness connector alignment key (guide) with the receptacle socket alignment slot (will only connect one way). Carefully insert the seat harness plug in the receptacle socket. Seat harness connector will lock into socket.

Seat Harness Plug and Receptacle

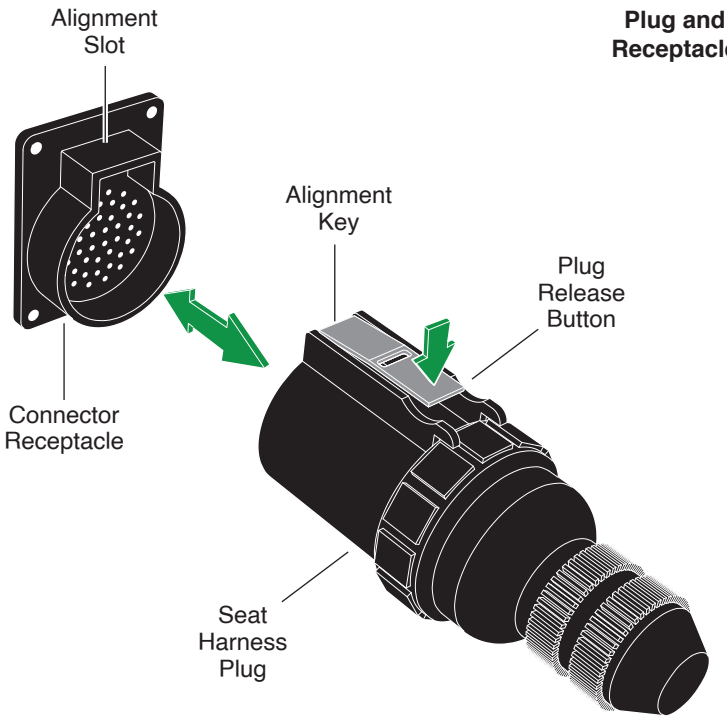

Front Seat Wiring Harness & B-Pillar Receptacle

An electrical harness receptacle is located to the rear of each seat base in the wall (at “B” pillar). The seat wiring harness plug connects to the receptacle socket.

Before removing seats, be certain seat wiring harnesses are disconnected.

⚠CAUTION

Disconnect seat wiring harness before removing seat. Failure to do so may result in property damage.

Figure 12

Seat Harness B-Pillar Connection

Passenger side front seat base (riser) shown without seat for clarity.

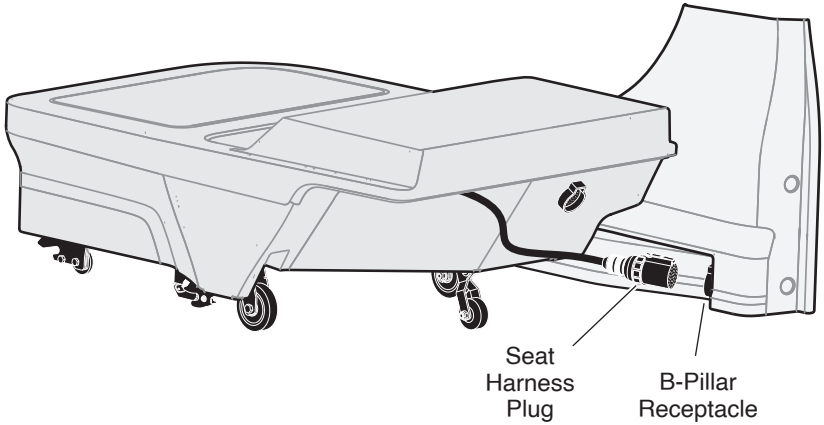

Figure 13

Seat Harness Storage Connection

Passenger side front seat base (riser) shown without seat for clarity.

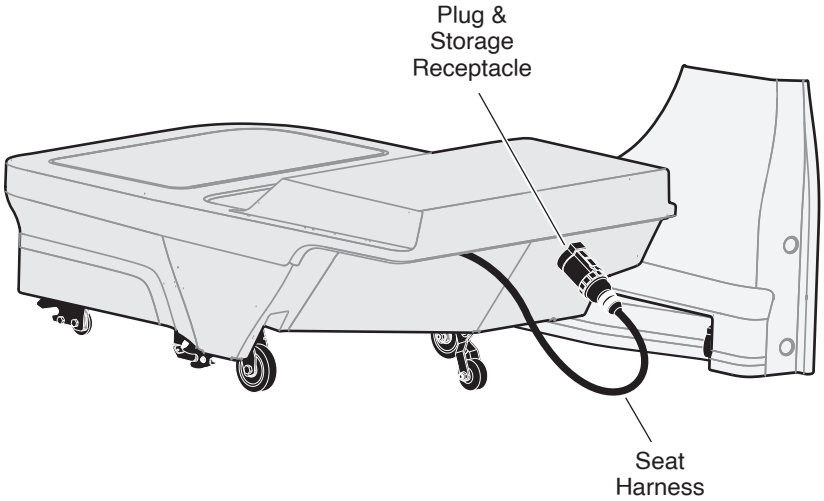

Harnesses Seat Base Storage Receptacle

When seats are removed, the seat electrical harness plug must be connected to the storage receptacle provided in the seat base. Connection to storage receptacle will minimize the possibility of seat air bag deployment during storage.

⚠WARNING

Connect front seat wiring harness plug to socket provided in the seat base before removing front seat. Failure to do so may result in serious bodily injury and/or property damage.

Front Seat Removal Instructions

1. Move seat to the full forward upright position and seat height to the lowest position. OEM seat operation has not been affected by conversion.

2. Caution! Disconnect seat wiring harness before removing the front seat assembly. Connect harness to seat base socket. See pages 47-49 for seat wiring harness details.

3. Pull T-handle release and release support handle together (gripping motion).

4. Use the release handle assembly to pull the seat up and then rearward. This motion disengages the floor attachments and deploys the retractable rear wheels.

Figure 14

Disengage Seat Assembly

Passenger side front seat is shown. Driver side seat removal instructions are the same.

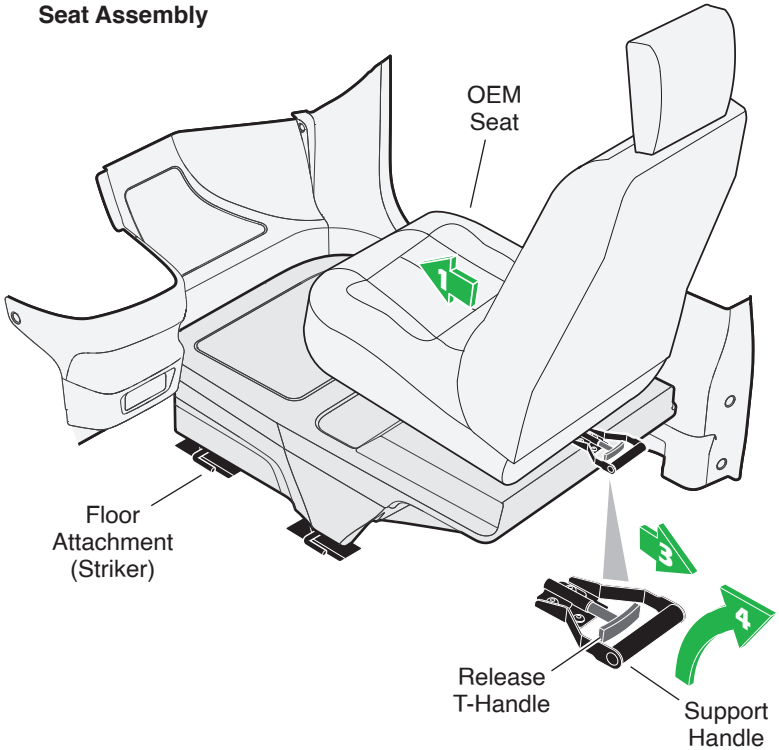

Figure 15

Remove Seat Assembly

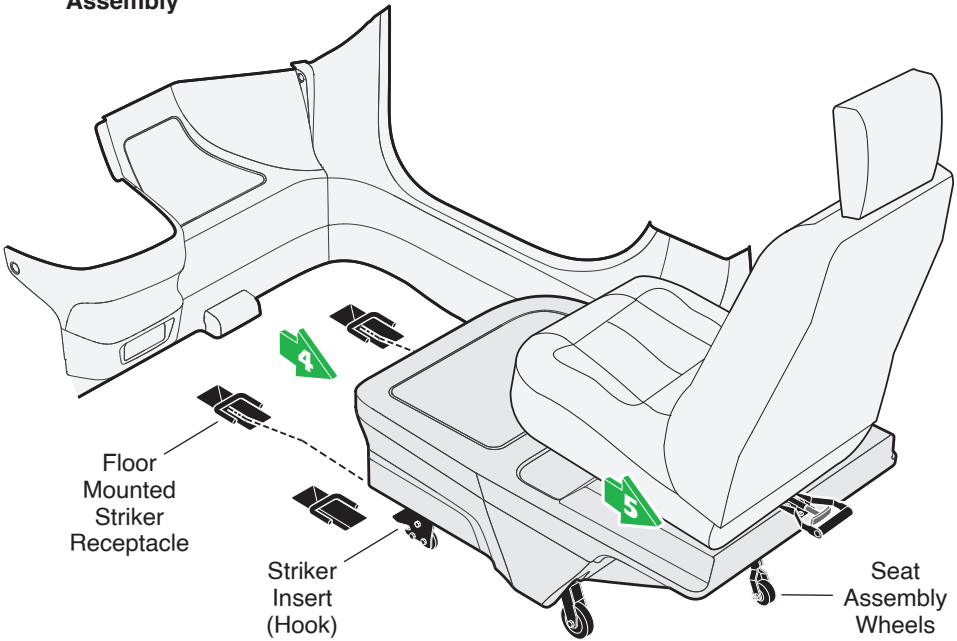

5. Roll seat assembly out of vehicle. The seat assembly is on wheels for easy removal.

Front Seat Installation Instructions

1. Roll seat assembly into position. Align the front striker attachments (hooks) with the front floor mounted strikers. Roll seat base forward into pockets. The base will drop into pocket and push forward to engage strikers.

   Note: Seat assembly will stop when hooks engage strikers fully.

Figure 16

Roll Seat Assembly into Position

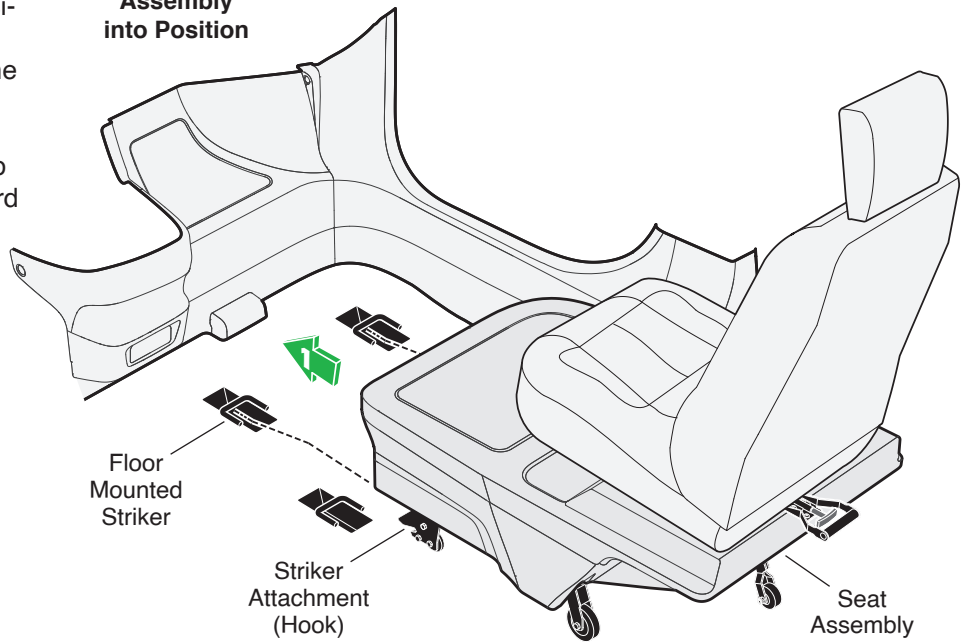

Figure 17

Seat Assembly Installed

Ensure the seat assembly is fully latched.

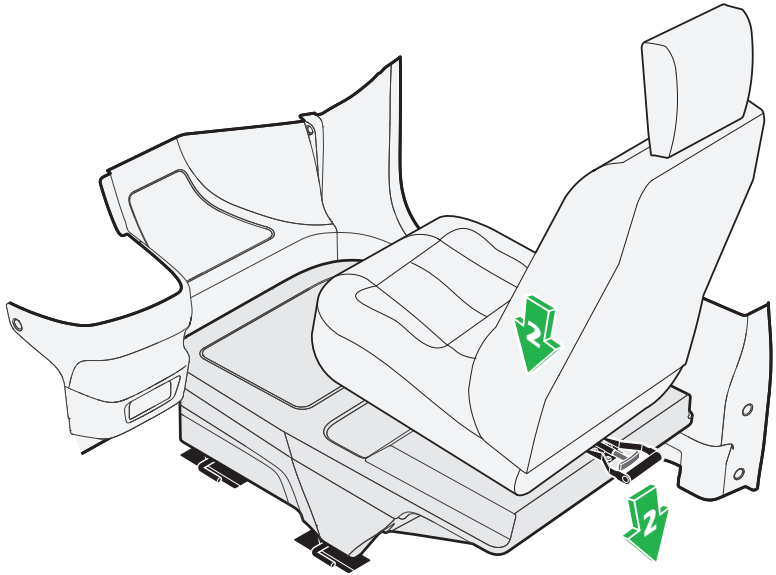

2. Push down on rear of the seat assembly to retract the rear wheels and engage the floor strikers. Lift seat to ensure the seat base is fully engaged.

3. Connect (plug) seat electrical harness to B-pillar receptacle. See pages 47-49.

⚠WARNING

Seat attachments must be fully latched in floor supports before occupying seats or operating vehicle. Failure to do so will result in serious bodily injury.

Third Row Seats

OEM third row seat functions have been affected by the conversion. The third row seats "tilt forward" lever has been disabled. The Auto-Stow button has been disabled and the Stow ‘n Go™ seat storage system has been removed. Third row seats retain seat back fold and recline features. See OEM manual for seat fold and recline features.

Third Row Seat Footrest

A lighted third row seat footrest is provided to accommodate passenger footing with the lowered floor.

Deploy footrest (fold down).

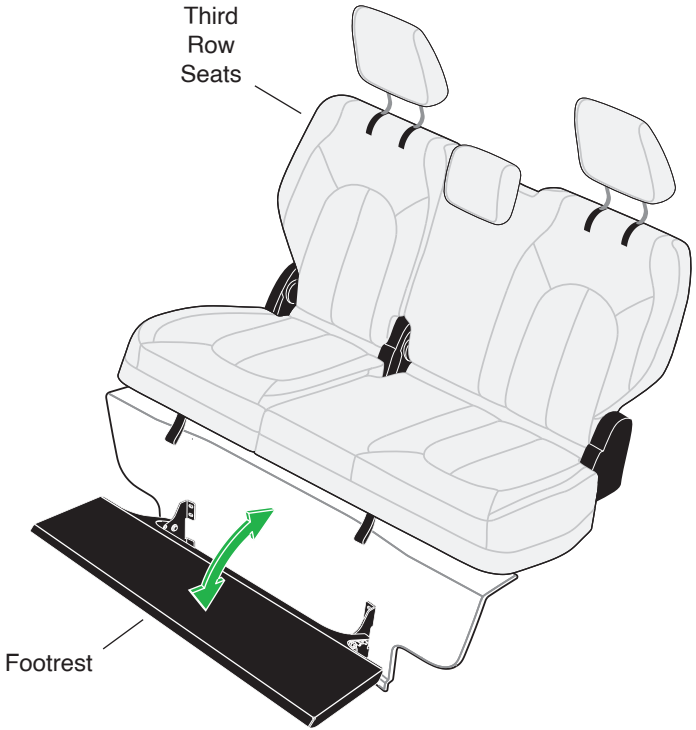

BraunAbility® wheelchair accessible vehicles are designed to provide years of pleasure and mobility independence. Regular preventive maintenance procedures will ensure trouble-free operation and increase the service life of your vehicle, as well as enhancing safety. Review this maintenance section with your sales representative.

Consumer Maintenance

As a consumer, general preventive maintenance cleaning and visual inspection procedures should be a part of your routine. Keeping the wheelchair accessible door and lowered floor opening clean is one of the most effective preventive maintenance practices the consumer can exercise. Inspect and clean often.

Side Entry Vehicles

Foldout and Infloor Ramps: Keep the passenger side slide door lower track pan free of debris, ice and snow. Smooth unobstructed slide door operation is crucial for dependable door and ramp functions.

Infloor Ramp: Keep the infloor ramp and ramp cassette area clean as well as the door track. Dirt, mud, snow, ice and other debris entering the cassette can result in potential ramp problems.

Inspect wheelchair tiedowns, occupant restraint belts and associated hardware. See Strap, Belt and Anchorage Maintenance on page 31 for further details.

If there is any sign of damage, wear, abnormal condition or improper operation, discontinue use immediately. Contact your sales representative or call 1-800-488-0359. One of our BraunAbility® Customer Care representatives will direct you to an authorized service center.

Preventive maintenance procedures performed by the consumer do not take the place of the procedures outlined in Maintenance Guidelines and Service Log Booklet, or the maintenance procedures specified in the corresponding service manual.

MobilityService Excellence

Dealer Scheduled Maintenance

Maintenance of the wheelchair accessible systems and equipment is vital to function and reliability. Mobility equipment maintenance should be performed in conjunction with the maintenance scheduled by the vehicle OEM manufacturer.

Have OEM and BraunAbility® maintenance procedures performed according to recommended oil change intervals, or at 5,000 mile/8,000 km/6 month intervals (whichever comes first). A detailed maintenance schedule is provided in the Maintenance Guidelines and Service Log Booklet that will closely correspond with the OEM maintenance schedule. Keep track of scheduled maintenance and service procedures in the Maintenance and Service Log.

BraunAbility® lowered floor wheelchair accessible vehicles must be maintained and serviced by authorized service representatives who have attended the Mobility Service Excellence training program (MSE certified).

Service technicians should be familiar with the lowered floor configuration and any specialized driving equipment (driving controls). Extra care must be taken to avoid possible damage.

Your BraunAbility® certified dealer can perform maintenance and service procedures, or recommend a qualified service facility. If in doubt, call 1-800-488-0359. A BraunAbility® Customer Care representative will direct you to an authorized service center.

⚠WARNING

Maintenance and lubrication procedures must be performed by authorized service personnel as specified in this manual, maintenance booklet and applicable service manual. Failure to do so may result in serious bodily injury and/or property damage.

Note: The technical information provided on pages 58-61 of this manual is service related. If you are having an electrical tie-down, power seat or other auxiliary electrical device installed in your vehicle, this information should be supplied to the technician.

⚠CAUTION

Do not connect auxiliary devices to vehicle battery. Doing so may result in damage to electrical system and/or electronic components.

Auxiliary Power Supply: Do not connect auxiliary devices directly to the vehicle battery. Doing so may result in damage to electrical system and/or electronic components.

Two fuse blocks are provided as an auxiliary power source for dealer-installed auxiliary electrical device(s). Fuse block details and specifications are provided on following page. The fuse blocks are located at the bottom of the center console (driver's side).

Below Floor Obstructions: When installing aftermarket equipment, obstructions below the floor must be avoided. Obstructions include wiring, fuel system, brake lines, etc. Installers must be aware of these obstructions.

Refer to the illustration on page 61 to avoid contacting or damaging vital components under the floor.

⚠WARNING

Risk of electrical fire! Install and electrically terminate auxiliary electrical device as specified by device manufacturer.

Fuse Blocks: Two fuse blocks are provided for use as an auxiliary power source (one ignition fuse block and one battery fuse block).

The battery fuse block provides power at all times (independent of the vehicle ignition). The ignition fuse block supplies power only when the vehicle ignition is on.

The installer is responsible for supplying the correct gauge wire and fuse for the particular device to be attached to the fuse block (as specified by the manufacturer of the device).

Ignition Fuse Block: The total maximum load must not exceed 30 amperes.

Battery Fuse Block: The total maximum load must not exceed 40 amperes.

Note: If installing an auxiliary electrical device that requires more than a 30 ampere ignition or 40 ampere battery power source, an alternative power source must be provided.

Fuse Block Access: The fuse blocks are located at the bottom of the center console (driver's side). Fuse block access procedures are provided in the service manual.

Note: The fuse blocks are part of an electrical assembly. Two ground locations are also provided.

Under Dash Fuse Blocks

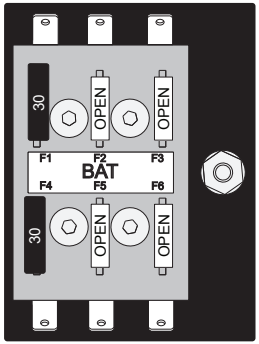

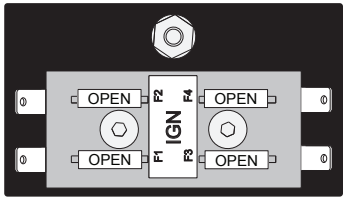

Below Floor Obstructions

When installing an electrical tie-down, power seat or other aftermarket electrical device, obstructions below the floor must be avoided. Obstructions include wiring, fuel system, brake lines, etc. Installers must be aware of these obstructions.

⚠WARNING

Check for obstructions such as wires, gas lines, exhaust, etc. before drilling or cutting through floor. Failure to do so may result in serious bodily injury and/or property damage.

Refer to the illustration on the following page when installing aftermarket equipment to avoid contacting or damaging vital components under the floor. Drilling or cutting into such obstructions may result in potential hazards as well as property damage.

Note: Some wiring harnesses shown may not be present. Avoid all harness locations.

⚠WARNING

Risk of electrical fire! Install and electrically terminate auxiliary electrical device as specified by device manufacturer.

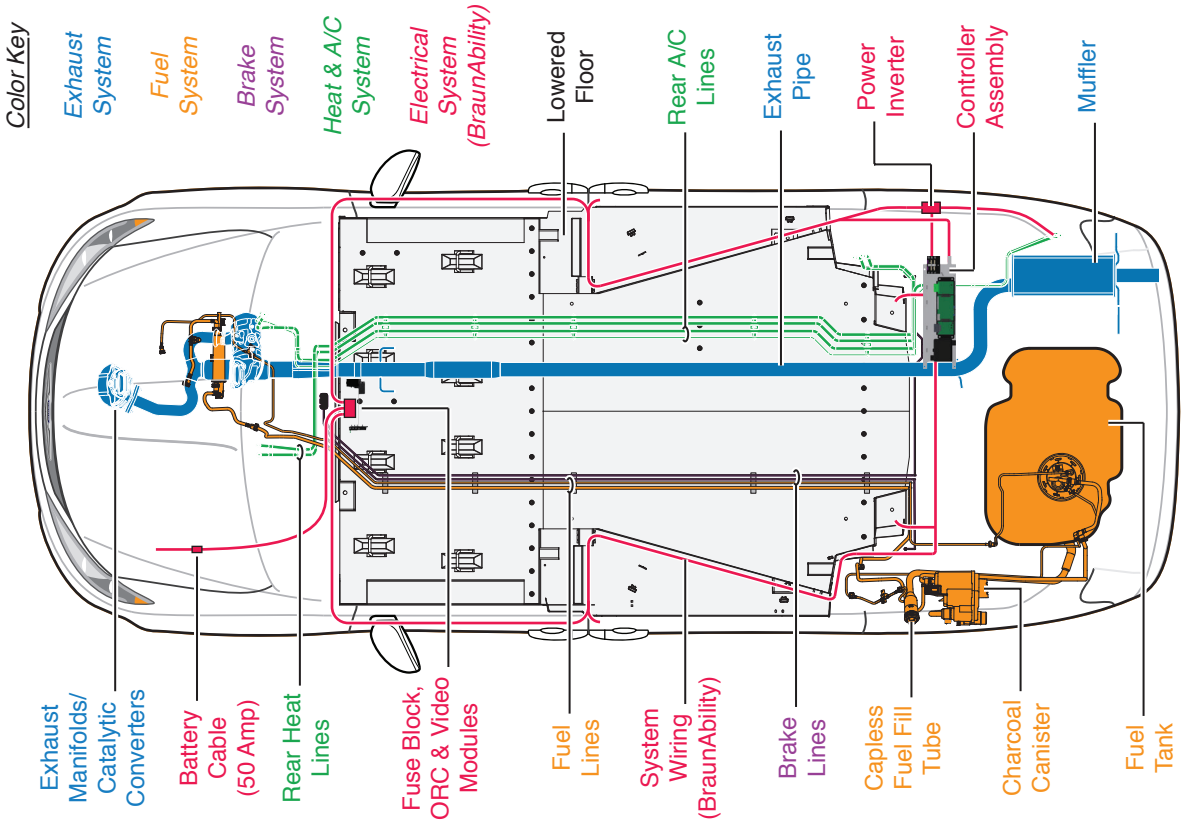
Color Key
Exhaust System
Fuel System
Brake System
Heat & A/C System
Electrical System (BraunAbility)
Lowered Floor
Rear A/C Lines
Exhaust Pipe
Power Inverter
Controller Assembly
Muffler
Exhaust Manifolds/ Catalytic Converters
Battery Cable (50 Amp)
Rear Heat Lines
Fuse Block, ORC & Video Modules
Fuel Lines
System Wiring (BraunAbility)
Brake Lines
Capless Fuel Fill Tube
Charcoal Canister
Fuel Tank

Jacking and Tire Changing

Interior Spare Tire Mount: The spare tire is located in the driver side rear wall compartment (OEM location - if equipped).

Jack Location: The OEM jack equipment is located in the driver side rear wall compartment (OEM location - if equipped).

Jack Points: Front and rear wheel jacking points have been repositioned during conversion procedures. The modified vehicle jack points are depicted in the illustration at right.

Jacking and Tire Changing Procedures: Jacking and tire changing procedures have not been affected by the conversion. If the rear of the vehicle is in the kneeled position, raise the rear of the vehicle to normal position before jacking. Detailed tire changing instructions are provided in the OEM-supplied owner's manual.

Refer to the OEM-supplied manual for tire changing instructions and safety precautions, as well as instructions regarding other roadside emergencies.

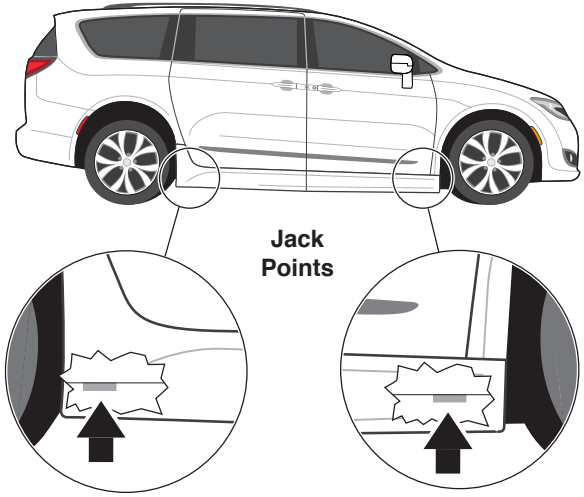

Towing with a Lowered Floor Vehicle

If your vehicle is equipped with an OEM factory installed trailer tow bumper package, refer to the OEM manual for towing guidelines and precautions. Be sure to comply with critical weight limits before towing. Aftermarket trailer tow packages are prohibited.

Transporting a Lowered Floor Vehicle

BraunAbility lowered floor vehicles should be transported on a trailer rather than towed with one set of wheels suspended and the other set of wheels remaining in road contact.

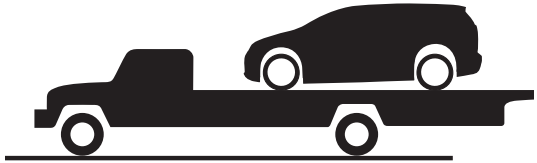

Trailer Transport

Reporting Safety Defects to BraunAbility

In addition to notifying NHTSA we certainly hope you will notify us. Please contact Customer Care at 1-800-488-0359, or write:

BraunAbility
631 West 11th Street
P.O. Box 310
Winamac, IN 46996 USA

Reporting Safety Defects to the United States Government

If you believe that your vehicle has a defect which could cause a crash or could cause injury or death, you should immediately inform the National Highway Traffic Safety Administration (NHTSA) in addition to notifying BraunAbility.

If NHTSA receives similar complaints, it may open an investigation, and if it finds that a safety defect exists in a group of vehicles, it may order a recall and remedy campaign. However, NHTSA cannot become involved in individual problems between you, your dealer or BraunAbility.

To contact NHTSA, you may either call the Auto Safety Hotline toll-free at 1-800-424-9393 (or 366-0123 in Washington, D.C. area) or write to:

NHTSA, U.S. Department of Transportation
Washington, D.C. 20590

You can also obtain other information about motor vehicle safety from the Hotline.

BraunAbility

1.800.THE.LIFT®

braunability.com™

© 2020 BraunAbility. All rights reserved. All illustrations, descriptions and specifications in this manual are based on the latest product information at the time of publication. The Braun Corporation reserves the right to make changes at any time without notice.

506968 Rev B

August 2020